CONTENTS

1、Product Overview 1

1. 1 Product Model Designation..... 1

1. 2 Optional Function Code Designation..... 1

1. 3 Product Nameplate..... 3

1. 4 Product Appearance..... 4

1. 5 Technical Specifications..... 7

1. 6 Product Design Standards..... 10

1. 7 Safety Precautions..... 10

1. 8 Important Notes..... 12

1. 9 Routine Inspection and Maintenance..... 14

2、Keypad..... 15

2. 1 Keypad Overview..... 15

2. 2 Keypad and Mounting Bracket Dimensions..... 16

2. 3 Keypad Operating Instructions..... 18

2. 4 Parameter Setting Procedure..... 18

2. 5 Switching Within and Between Function-Code Groups..... 19

2. 6 Keypad Display Information..... 20

3、Installation and Wiring..... 21

3. 1 Peripheral Wiring Diagram..... 21

3. 2 VFD Installation..... 23

3. 3 Wiring..... 23

3. 4 Control Terminal Functions..... 25

3. 5 Measuring Main-Circuit Voltage, Current, and Power..... 30

3. 6 Recommended Power-Circuit Wiring..... 32

3. 7 Protective Conductor (PE) Cross-Section..... 34

3. 8 Overall Wiring Diagram..... 34

3. 9 Measures Against Conducted and Radiated Interference..... 35

4、Quick Operation and Running Guide..... 41

4. 1 Basic Product Information..... 41

4. 2 Quick Operating Guide..... 42

4. 3 Basic Control and Running Guide..... 45

5、Function Parameters.....51
5.1 Basic Parameters.....51
5.2 Run Control.....61
5.3 Multi-function Input/Output Terminals.....69
5.4 Analog and Pulse Inputs/Outputs.....79
5.5 Multi-Step Speed Control.....88
5.6 Auxiliary Functions.....93
5.7 Faults and Protection.....99
5.8 Motor Parameters.....104
5.9 Communication Parameters.....109
5.10 PID Parameters.....110
5.11 Torque-Control Parameter Group.....116
5.12 Display Parameter Group.....119

Appendix 1 Common Fault Troubleshooting.....121
Appendix 2 Product List and Frame-Type List 125
Appendix 3 Recommended Braking Resistor Selection Table 129
Appendix 4 Communication Manual 130
Appendix 5 Reference Wiring Diagrams for Water-Supply Systems 142
Appendix 6 Function-Code Quick Reference 145
Appendix 7 Input Filter Models and Dimensions 179

1、PRODUCT OVERVIEW

This manual briefly describes the installation and wiring, parameter settings, and operation of the A700 Series variable frequency drive (VFD). Keep this manual in a safe place for future reference. If a fault occurs during use, contact the manufacturer or your distributor.

1.1 PRODUCT MODEL DESIGNATION

H-Driver A700 -4T 0075

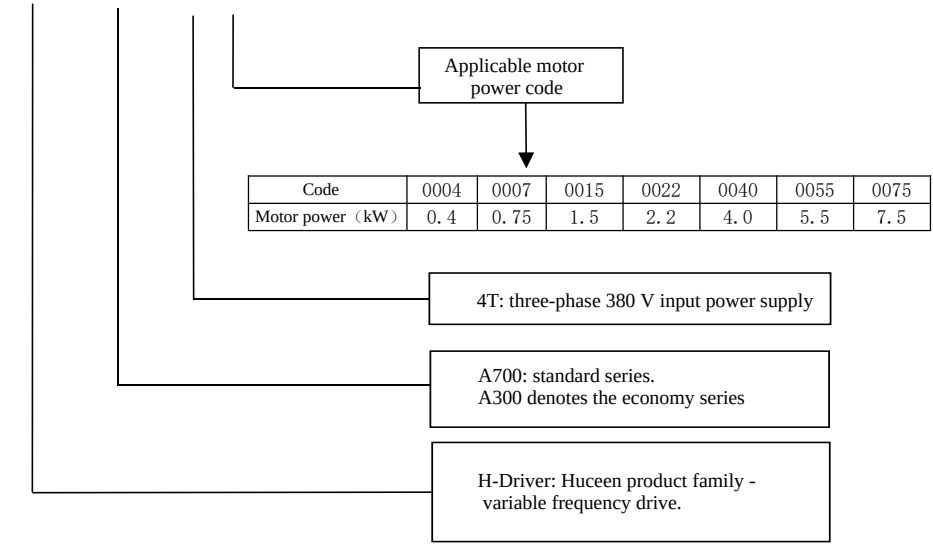

Figure 1-1 Product model designation

1.2 OPTIONAL FUNCTION CODE DESIGNATION

E4 F2 73 B — XX
① ② ③ ④ ⑤

①	Frame code	A700 Series:E1\E2\E4\E5\E6\E7\C4\C5
②	Communication interface	F2：Modbus
		F4：CANopen+Modbus
		F5：EtherCAT+Modbus
		F9：Profibus DP+Modbus
		F15：CAN+Modbus
③	Keypad code	71: Keypad without potentiometer for A700 E1 frame
		72: Keypad with analog potentiometer for A700 E1 frame
		73: Keypad without potentiometer for A700 E2-E6 frames
		74: Keypad with analog potentiometer for A700 E2-E6 frames
		75: Keypad without potentiometer for A700 E7-C7 frames
		76: Keypad with analog potentiometer for A700 E7-C7 frames
④	Built-in braking unit	B: Built-in braking unit
		Blank: No braking unit
⑤	Special code	Depending on the actual situation

Figure 1-2 Optional function code designation

NOTES (numbering follows the source manual):
1. For A700 Series three-phase 380 V (4T) models, a braking unit is standard on models rated 30 kW and below. A built-in braking unit is optional for three-phase 380 V models rated 37-75 kW.
2. Models rated 45 kW and below do not include a DC reactor. Models rated 55 kW and above are supplied with a DC reactor as standard; an internally mounted DC reactor is optional.

3. Local keypads for the A700 Series

Frame code	Keypad code	Description
E1	71	Keypad without potentiometer
	72	Keypad with analog potentiometer
E2～E6	73	Keypad without potentiometer
	74	Keypad with analog potentiometer
E7～C7	75	Keypad without potentiometer
	76	Keypad with analog potentiometer

4、Communication types

Applicable frame	Communication code	Description
E1 frame and above	F2	RS-485 Modbus (currently Modbus only)
	F4	CANopen+Modbus
	F5	EtherCAT+Modbus
	F9	ProfibusDP+Modbus
	F15	CAN+Modbus

5、Certification type

Certification code	Certification	Supported power
U1	CE	≤500kW

1.3 PRODUCT NAMEPLATE

The figure shows the nameplate of an A700 Series 5.5 kW VFD with three-phase 380 V AC input, a built-in braking unit, and a keypad equipped with a potentiometer.

HUCEEN Shenzhen Huceen Automation Technology Co., Ltd.				
Model	A700 - 4T0055 - E2F273B- XX			
Input	3 PH	AC	380~480 V	50/60 Hz
Output	3 PH	AC	0 - INPUT V	12 A
	5.5 kW		0.50~590.0 Hz	





A700-4T0055-E2F273B-XXXXXXXX

IP20

Figure 1-3 Product nameplate

"3 PH" at the input indicates three-phase input. "380 V, 50/60 Hz" indicates the input voltage and rated frequency. "3 PH" at the output indicates three-phase output. "12 A, 5.5 kW" indicates the rated output current and power. "0.50-590.0 Hz" indicates the output-frequency range.

Note: The complete unit model consists of the product model and the optional function code. When placing an order, always specify the complete unit model to prevent shipment of an incorrect product and disruption of normal use.

1.4 PRODUCT APPEARANCE

1.4.1 Appearance

A700 Series VFDs are available in two main housing constructions: plastic and metal. Both use a wall-mounted installation arrangement. The plastic enclosure is molded from high-quality material, providing an attractive appearance, high strength, and good toughness.

The following figure uses model A700-4T0110-E4F273B-XX as an example to identify the product appearance and structural components.

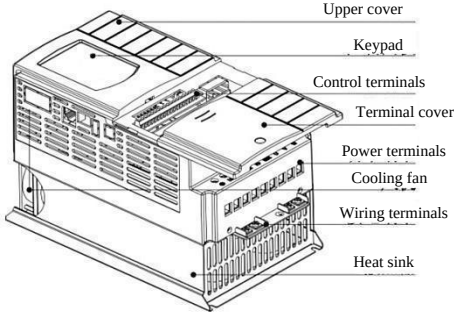

Figure 1-4 Plastic-enclosure product appearance and components

The metal enclosure uses an advanced powder-coating process for a refined and attractive finish. The front cover is divided into removable upper and lower sections, making wiring and maintenance convenient.

The following figure uses model A700-4T0550-C4F275N-XX as an example to identify the product appearance and structural components.

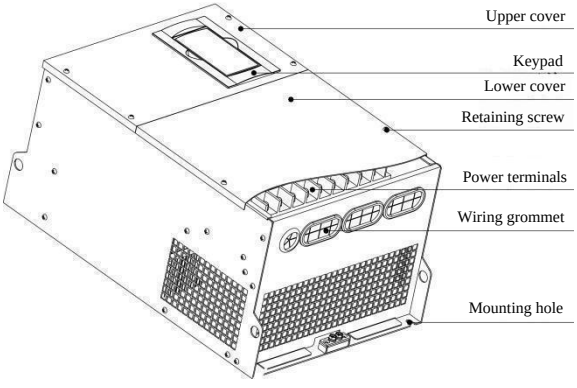

Figure 1-5 Metal-enclosure product appearance and components

1. 4. 2 INTERFACE DESCRIPTION

（1）、E1 frame interfaces：

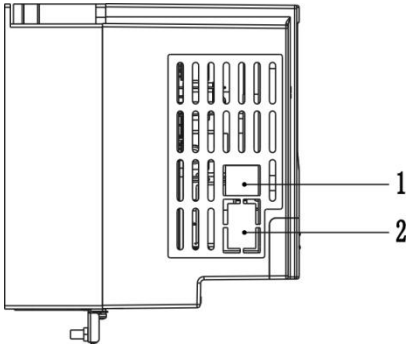

（2）、E2-E6 frame interfaces：

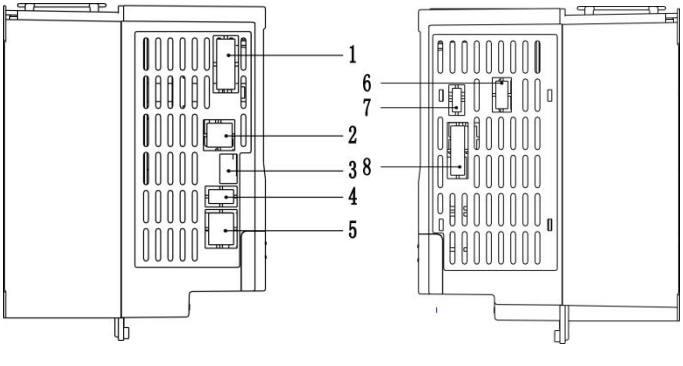

（3）、E7-C7 frame interfaces

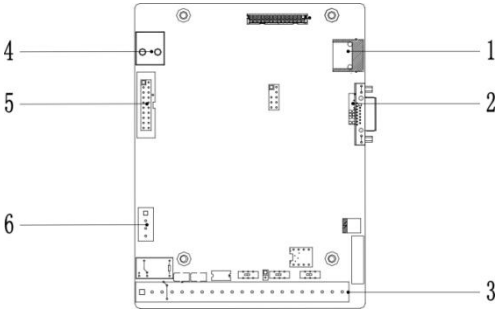

Table 1-1 A700 interface description

No.	Interface description		
	E1 frame	E2-E6 frames	E7 and metal-enclosure frames
1	8-pin RJ45 remote-keypad interface	Reserved	8-pin RJ45 remote-keypad interface
2	RS-485 communication (A+, B-)	8-pin RJ45 remote-keypad interface	Reserved
3		RS-485 communication (A+, B-)	Control terminals
4		Reserved	Reserved
5		Reserved	Reserved
6		Reserved	RS-485 communication (A+, B-)
7		Reserved	
8		Reserved	

1.5 TECHNICAL SPECIFICATIONS

Table 1-2 A700 Series VFD technical specifications

	Item	Specification
Input	Rated voltage range	Three-phase 380-480 V (+10% / -15%)
	Rated frequency	50/60Hz
Output	Rated voltage range	Three-phase 0 to input voltage (V)
	Frequency range	0.50-590.0 Hz (must not exceed 500 Hz in vector-control mode)
Control	Carrier frequency	0.8-10 kHz; fixed or random carrier selectable with F159

Control	Input frequency resolution	Digital setting: 0.01 Hz; analog setting: upper-limit frequency x 0.1%.
	Control modes	VVVF (V/F) control; SVC (sensor-less vector control); for synchronous motors, SVC open-loop vector control.
	Starting torque	150% at 0.5 Hz
	Speed-control range	1：100
	Steady-speed accurac	±0.5%
	Torque-control accuracy	±5%
	Overload capacity	For ratings of 75 kW and below, 150% of rated current for 60 seconds.
	Torque boost	Manual torque-boost curve settings 1-20; automatic torque boost.
	VVVF curve	Three options - linear, quadratic, and user-defined VVVF curve.
	Starting methods	Direct start and speed-search start (flying start).
	DC injection braking	Braking frequency 0.20-50.00 Hz; braking time 0.00-30.00 s.
	Jog control	Jog-frequency range from lower-limit frequency to upper-limit frequency; jog acceleration/deceleration time 0.1-3000 s.
	Automatic cycle / multi-step speed	Up to 15 step speeds through automatic cycling or control terminals.
	Built-in PID	Enables convenient implementation of a closed-loop process-control system.
	Automatic voltage regulation (AVR)	Automatically maintains a constant output voltage when the supply voltage changes.
Operating functions	Frequency setting	Potentiometer or external analog signal (0-5 V, 0-10 V, or 0-20 mA); keypad/ terminal UP and DOWN keys; external control logic; or automatic-cycle setting.
	Start/stop control	Terminal control, keypad control, or communication control.
	Run-command channel	Three channels - keypad command, control-terminal command, and serial-communication command.
	Main frequency reference	Digital reference, analog-voltage reference, analog-current reference, serial-port reference, etc.
	Auxiliary frequency reference	Six auxiliary-frequency options for fine adjustment, frequency summation, and other combinations.
Optional item	Built-in braking unit	
Protection functions	Input phase loss, output phase loss, input undervoltage, DC-bus overvoltage, overcurrent, VFD overload, motor overload, current stall, overheat, external interference, analog disconnection protection, etc.	
Display	The LED display can show current output frequency, current speed (rpm), current output current, current output voltage, current DC-bus voltage, current PID feedback, current PID setpoint, current linear speed , fault type, system parameters, and operating parameters. LED indicators show the current operating status of the VFD.	
Environmental conditions	Installation location	Indoors; no direct sunlight, dust, corrosive gas, flammable gas, oil mist, water vapor, dripping water, salt, or similar contaminants.
	Ambient temperature	-10℃～+40℃

Environmental conditions	Relative humidity	Below 90%, with no condensation
	Vibration	Below 0.5g (acceleration)
	Altitude	1,000 m or below. Derating the VFD when the installation altitude exceeds 1,000 m.
Degree of protection	IP20	
Applicable motor rating	0.4kW～75kW	

Note: When an input-voltage rating of 420-480 V is required, specify this requirement when ordering.

1. 6 PRODUCT DESIGN STANDARDS

● IIEC/EN 61800-5-1:2007, Adjustable speed electrical power drive systems - Safety requirements - Electrical, thermal and energy.

● IEC/EN 61800-3:2004 + A1:2012, Adjustable speed electrical power drive systems - Part 3: EMC requirements and specific test methods.

1. 7 SAFETY PRECAUTIONS

● Before installation, carefully verify the VFD model and ratings on the nameplate. Inspect the unit for shipping damage. Do not use a damaged VFD or a unit with missing parts, as this may create a safety hazard.

● The installation and operating environment shall be free from rain splash, water droplets, steam, dust, oily dust, corrosive or flammable gases and liquids, metal particles, and metal powder. Ambient temperature should be within the range of -10 degrees C to +40 degrees C.

● Mount the VFD on metal or another flame-retardant material, away from combustible materials.

● Do not allow wire ends, screws, or other foreign objects to fall into the VFD.

● VFD reliability depends heavily on temperature. A 10 degrees C rise in ambient temperature may reduce VFD service life by half. Incorrect installation or inadequate mounting may cause the VFD or its surroundings to overheat, resulting in faults, damage, or other accidents.

● When the VFD is installed in a control cabinet, ensure unobstructed ventilation between the cabinet and the surrounding environment. Install the VFD vertically so that heat can rise and dissipate; do not install it upside down (see Figure 1-6). When several VFDs are installed in one cabinet, side-by-side installation is preferred to provide adequate cooling space. If units must be installed one above another, install a heat-insulating airflow guide plate between them (see Figure 1-7).

Vertical installation

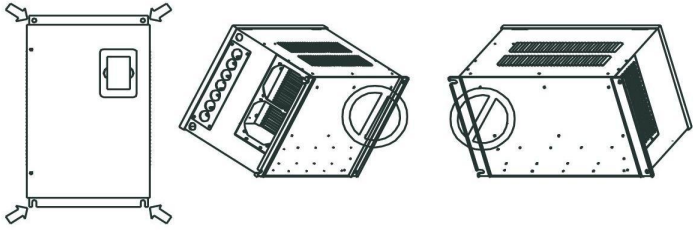

Figure 1-6 Correct vertical installation of the VFD

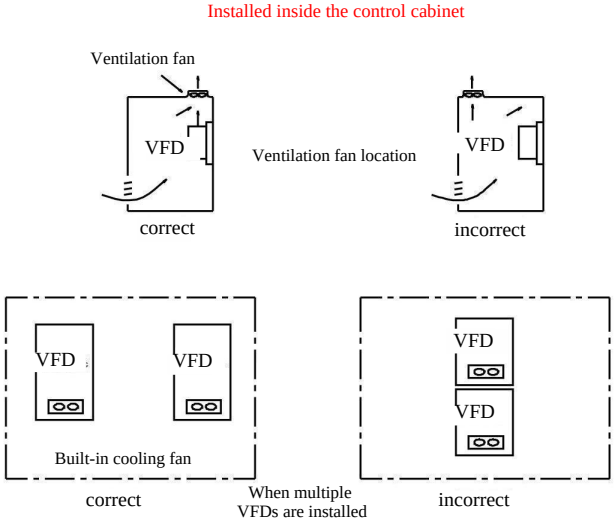

Figure 1-7 Installing VFDs in a control cabinet

1. 8 IMPORTANT NOTES

1. 8. 1 Instructions for Use

● ◇Only trained and qualified personnel may perform the relevant work.

◇Never perform wiring, inspection, or component replacement while power is applied. Before wiring or inspection, confirm that all input power sources are disconnected. Wait at least the time marked on the VFD, or verify that the DC-bus voltage is below 36 V. Theoretical minimum waiting time:

VFD rating	Minimum waiting time
75 kW and below	5 minutes

Note: The value above is only a theoretical calculation. Always measure the voltage and begin work only after it is below the safe-voltage level.

◇After power is applied, perform a safety check before any other work. Set a multimeter to AC voltage and measure between the VFD metal enclosure or heat sink and protective earth. Proceed only after confirming that the voltage is below the safe-voltage level.

● Connect mains power to power terminals L1/R, L2/S, and L3/T. For a supported single-phase connection , connect mains power to L1/R and L2/S. Connect output terminals U, V, and W to the motor.

● Grounding must be reliable, and grounding resistance must not exceed 4 ohms. Ground the motor and VFD separately; never connect their earth conductors in series.

● If a contactor or other switching device must be installed between the VFD output and the motor, operate it only while the VFD has no output. Never switch a motor at the VFD output while the VFD is running, as this may damage the VFD.

● Route control-circuit wiring separately from power-circuit wiring to avoid interference.

● Keep signal cables as short as practical; excessive length increases common-mode interference.

● Ensure that the surrounding environment satisfies Table 1-2, A700 Series VFD Technical Specifications.

● Never start or stop the VFD by switching its incoming power supply on and off. Doing so may damage the VFD.

● Before a motor is used for the first time, or after long-term storage, test its insulation to prevent VFD damage caused by failed motor-winding insulation.

● The VFD output is a PWM waveform. Do not install power-factor correction capacitors, surge-protection varistors, or similar devices on the output side. Such devices may cause nuisance trips or component damage and must be removed. See Figure 1-8.

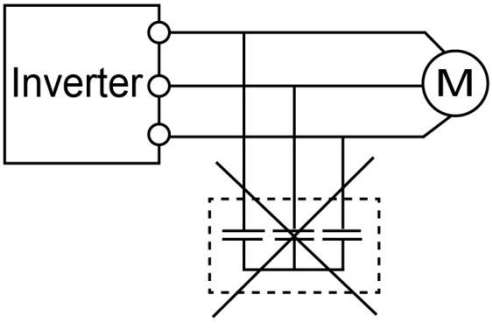

Figure 1-8 Do not connect capacitors to the VFD output

- At altitudes above 1,000 m, thinner air reduces VFD cooling performance; therefore, the VFD must be derated Figure 1-9 shows the relationship between rated current and altitude.

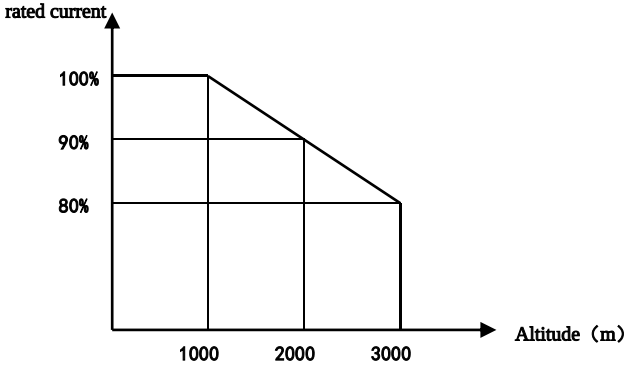

Figure 1-9 Rated-current derating versus altitude

1. 8. 2 SPECIAL WARNINGS

- Never touch the power terminals inside the VFD; electric shock may result.
- Before energizing the VFD, verify that the input supply voltage class is correct.

- Do not connect the input power supply to terminals U, V, W, or PE/E.
- Do not install the VFD in direct sunlight, and do not obstruct its cooling openings.
- Reinstall all protective covers before energizing the VFD to prevent electric shock.
- Maintenance, inspection, and component replacement may be performed only by qualified professionals.
- Live electrical work is strictly prohibited.

1.9 ROUTINE INSPECTION AND MAINTENANCE

1.9.1 Periodic Inspection

- Regularly clean the cooling fan and air passages and verify correct operation. Remove accumulated dust from inside the unit at regular intervals.
- Regularly inspect VFD input/output wiring and terminals for signs of arcing, and inspect cables for aging.
- Verify that all terminal screws are tight.
- Check the VFD for corrosion.

1.9.2 Replacement of Wear Parts

The main wear parts in the VFD are the cooling fan and filter electrolytic capacitors.

- Typical fan service life is 2-3 years. Determine replacement timing according to actual operating hours. Possible causes of fan failure include bearing wear and blade aging. Inspect fan blades for cracks and listen for abnormal vibration or noise during startup to determine whether replacement is required.
- Typical filter electrolytic-capacitor service life is 4-5 years. Determine replacement timing according to actual operating hours. Possible causes of capacitor damage include poor input-power quality, high ambient temperature, frequent abrupt load changes, and electrolyte aging. Determine whether replacement is required by checking for leakage, a raised safety vent, capacitance, and insulation resistance.

1.9.3 Storage

- Whenever possible, store the VFD in its original Huceen packaging.
- To prevent deterioration of electrolytic capacitors during extended storage, energize the VFD at least once every six months for a minimum of five hours.

1.9.4 Routine Maintenance

Ambient temperature, humidity, dust, and vibration can age internal components, create latent faults, and shorten VFD service life. Routine maintenance is therefore essential.

Daily checks:

- Check whether motor sound changes abnormally during operation.
- Check whether the motor vibrates during operation.
- Check whether the VFD installation environment has changed.
- Check whether the VFD fan operates normally and whether the VFD overheats.

1.9.5 Routine Cleaning:

Keep the VFD clean. Promptly remove dust from its surface and prevent accumulated dust, metal powder, oil, water, and other contaminants from entering the unit.

2、KEYPAD

A700 Series VFDs use two keypad versions: one with a potentiometer and one without. Key functions and indicator meanings are described below.

2. 1 KEYPAD OVERVIEW

The keypad consists of three sections: the data display, status indicators and operating keys, as shown in Figure 2-1.

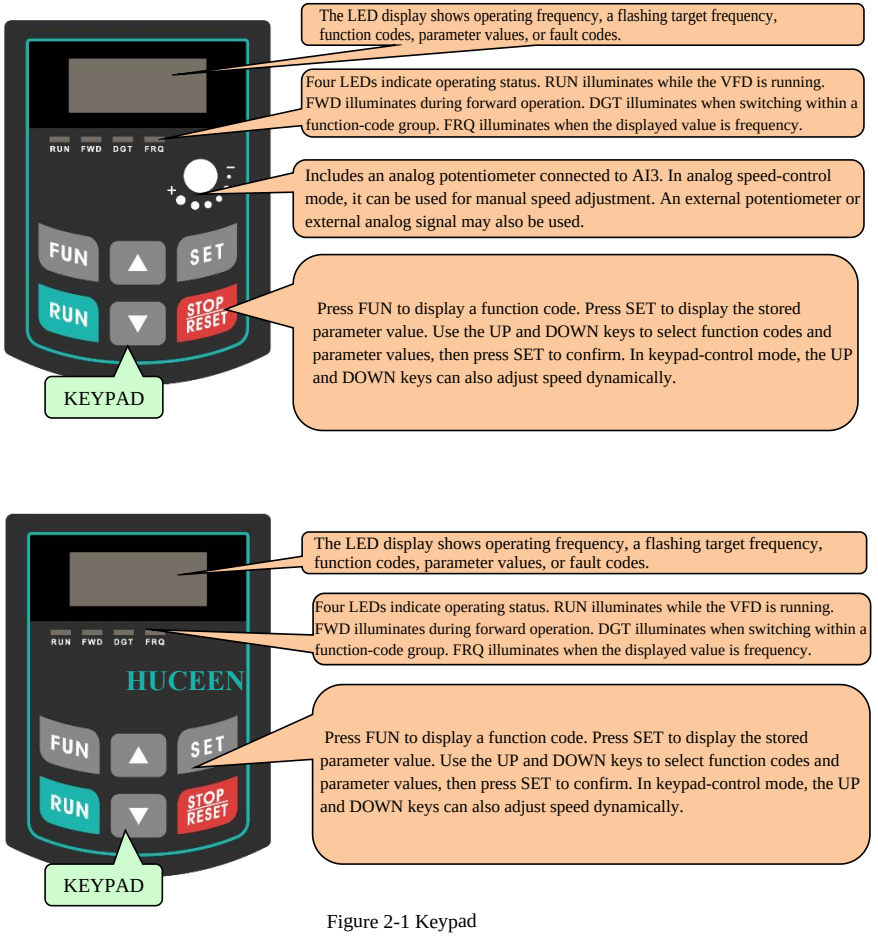

Figure 2-1 Keypad

NOTES

1. On VFDs rated 30 kW and below, the local keypad cannot be removed and extended directly. For remote operation, use an AA-A or A6-1-A remote keypad box connected through the 8-pin RJ45 interface.
2. On VFDs rated 37 kW and above, the local keypad can be remotely mounted. Use an A6-1-A remote keypad box and an 8-pin RJ45 cable.

2.2 KEYPAD AND MOUNTING BRACKET DIMENSIONS

1. Keypad outline drawing

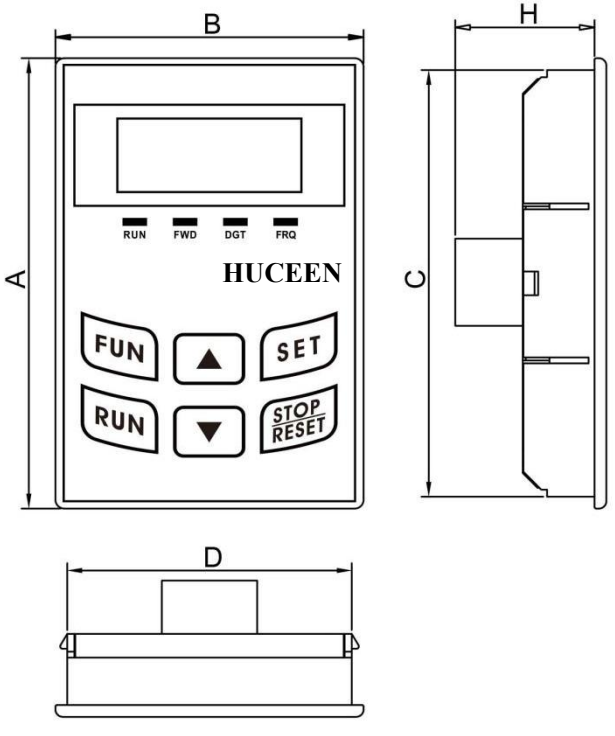

2. Keypad dimensions (unit: mm)

Code	A	B	C	D	H	Panel cutout
AA	76	52	72	48	24	73*49
A6-1	124	74	120	70	26	121*71

3. Remote-keypad mounting bracket dimensions

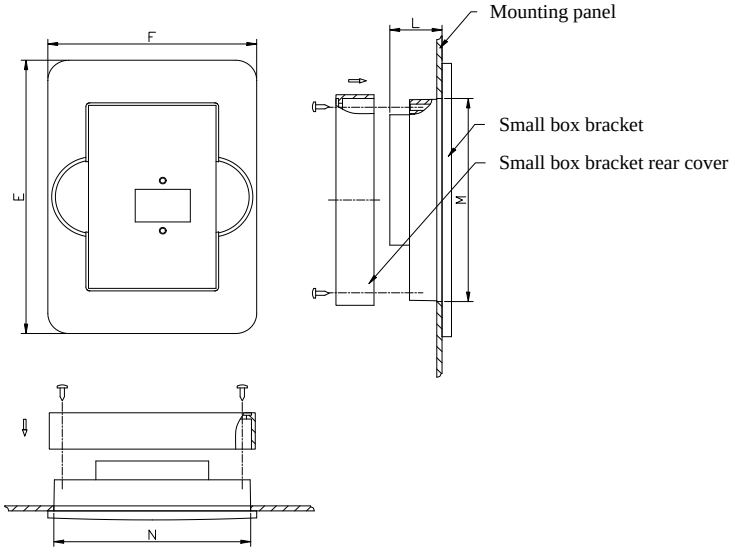

4. Remote-keypad mounting bracket dimensions (unit: mm)

Code	Overall dimensions			Panel cutout	
	E	F	L	N	M
A6-1	170	110	22	102	142
AA	109	80	20	75	81

5. Remote-keypad interface pin assignment

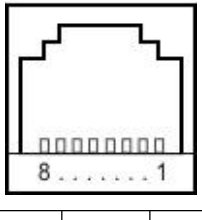

Pin	1	2	3	4	5	6	7	8
8-pin keypad connection	Potentiometer	5V	5 V ground	5 V ground	Signal 1	Signal 2	Signal 3	Signal 4

CAUTION: The control-board and remote-keypad-box interfaces are identical. When making a remote keypad cable, the conductor order at both ends must be exactly the same.

6. When remote-keypad control is used, the standard cable length supplied by the manufacturer is 1 m. Other lengths can be ordered. In environments with strong interference, or when the cable is longer than 3 m, install a ferrite core around the remote keypad cable to improve noise immunity.

2.3 KEYPAD OPERATING INSTRUCTIONS

All keypad keys are available to the user. Their functions are listed in Table 2-1.

Table 2-1 Key functions

Key	Name	Function
FUN	Mode/Function	Calls up function codes and switches display items.
SET	Set	Calls up and stores data.
▲	Increase	Increases data; used for speed adjustment or parameter setting.
▼	Decrease	Decreases data; used for speed adjustment or parameter setting.
RUN	Run	Runs the VFD.
STOP/ RESET	STOP/RESET	Stop/Reset | Stops the VFD; resets the VFD in a fault state ; switches within and between function-code groups.

2.4 PARAMETER SETTING PROCEDURE

The VFD contains many function parameters. By changing these parameters, the user can implement different control and operating modes.

If password protection is enabled by setting F107=1, then after power has been cycled or a protection trip has occurred, the user must enter the password before changing parameters. Call up F100 as shown in Table 2-2 and enter the correct password. Password protection is disabled at the factory, so parameters can initially be set without entering a password.

Table 2-2 Parameter setting steps

Step	Key operation	Action	Display
1	FUN	Press FUN | Display the function code.	F100
2	▲ or ▼	Press UP or DOWN | Select the required function code.	F114
3	SET	Press SET | Read the value stored in the selected function code.	5.0
4	▲ or ▼	Press UP or DOWN | Change the value.	9.0
5	SET	Save the new value and return to the current function-code display.	F114
	FUN	Return to the target-frequency display.	

Note: Perform the procedure above while the VFD is stopped.

2. 5 Switching Within a Function-Code Group and Between Groups

The drive provides eleven parameter groups, as shown in Table 2-3.

Table 2-3 Function-Code Groups

Group Name	Code Prefix	Group Name	Code Prefix
Basic Parameters	F1	Timing Control and Protection	F7
Run Control	F2	Motor Parameters	F8
Multi-function Inputs/Outputs	F3	Communication Functions	F9
Analog and Pulse Inputs/Outputs	F4	PID Parameters	FA
Multi-Step Speed	F5	Torque Control Parameters	FC
Auxiliary Functions	F6	Display Parameters	H0

Because the drive contains a large number of function codes, searching one code at a time can be time-consuming. A dedicated switching function is therefore provided to move either within the current group or directly between parameter groups.

Press FUN to display a function code. When the DGT indicator is ON, press or to cycle upward ordownward through the codes within the current group. Press STOP/RESET once to turn the DGT indicator OFF; then press or to cycle between parameter groups.

Example: If F111 is displayed and the DGT indicator is ON, pressing / cycles through F100 to F160. Press STOP/RESET again; the DGT indicator turns OFF. Pressing / now cycles between the groups, for example F211, F311, …, FC11, F111, …, as shown in Figure 2-2. In the manual, " 50.00" in a flashing display represents the corresponding target-frequency value.

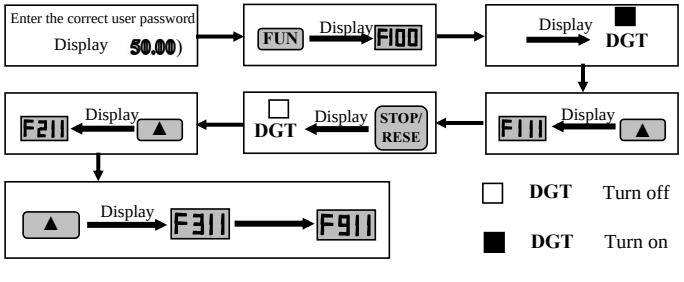

Figure 2-2 Switching Within and Between Function-Code Groups

2.6 Keypad Display Items

Display Item	Description
HF-0	In the stopped state, press FUN to display this symbol. It indicates that keypad jog operation is enabled. F132 must be configured so that “HF-0” can be displayed.
-HF-	Reset in progress. After reset, the display returns to the item shown before reset.
OC、OC1、OE、OL1、OL2、OH、LU、PF0、PF1、CE、FL、Err6	Fault codes. They respectively indicate overcurrent (OC/OC1), overvoltage, drive overload, motor overload, overheat, input undervoltage, output phase loss, input phase loss, communication fault, speed-tracking fault, watchdog fault, etc.
Err5	Invalid PID parameter setting.
ESP	During two-wire/three-wire operation, STOP/RESET was pressed, or the external emergency-stop terminal is active.
F152	Function code (parameter code)
10.00	Current operating frequency, parameter setting, etc.
50.00	Target frequency, flashing while stopped.
0.	Waiting time inserted during direction reversal. A stop or coast-to-stop command cancels the wait
A100、U100	Output current (100 A) and output voltage (100 V). Current values below 100 A are displayed with one decimal place.
b*.*	PID feedback value.
o*.*	PID setpoint.
L***	Linear speed.
H***	Heatsink temperature.

3、INSTALLATION AND WIRING

3.1 Peripheral Wiring Diagram

The external connection diagram for the A700 Series drive is shown on this page.

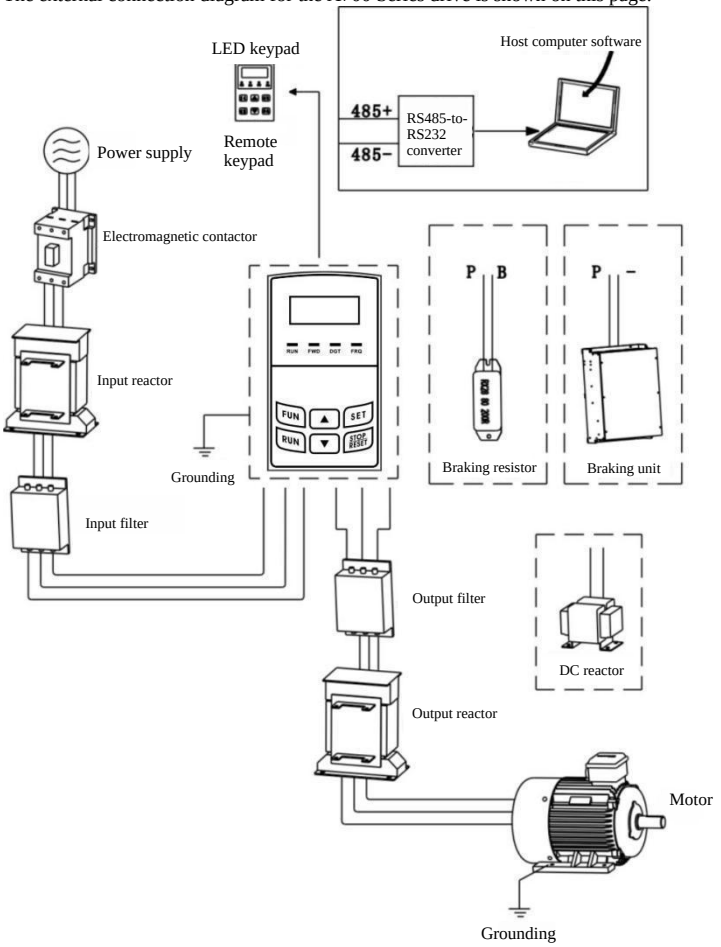

Notes:

（1）Models rated 30 kW and below are supplied with a built-in braking unit as standard. When load inertia is not high, only an external braking resistor is normally required.

（2）A built-in braking unit is optional for 37– 75 kW models.

（3）A built-in DC reactor is optional for models rated 55 kW and above.

3. 1. 1 Peripheral Components

Use a HUCEEN standard braking unit. Other recommended peripheral components are listed below.

Picture	Component	Description
	Cable	Carries electrical signals or power.
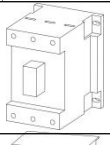	Circuit breaker / RCD	Protects against electric shock and earth faults that may cause fire due to leakage current. Use an earth-leakage circuit breaker suitable for VFD applications and capable of suppressing higher harmonics. For one drive, the rated residual operating current should be greater than 30 mA.
	Input AC reactor	Suitable for improving the input-side power factor of variable frequency drives and suppressing high-order harmonic currents.
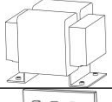	DC reactor	
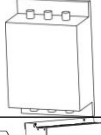	Input filter	Suppresses electromagnetic interference conducted from the drive through the input power cable to the public mains. Install it as close as possible to the drive input terminals.
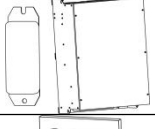	Braking unit or braking resistor	Dissipates regenerative energy from the motor to shorten deceleration time.
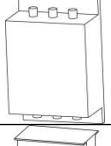	Output filter	Suppresses interference generated by wiring on the drive output side. Install it as close as possible to the drive output terminals.
	Output reactor	Extends the effective motor-cable distance and suppresses transient overvoltage caused by switching of the drive IGBT module.

3. 2 Drive Installation

Install the drive vertically, as shown in Figure 3-1.

Provide adequate ventilation clearance around the unit.

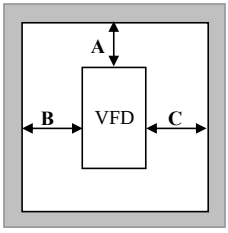

wall-mounted

Figure 3-1 Drive Installation Diagram

Recommended Installation Clearances

Frame	Gap dimension		
E1～E7	A≥100mm	B≥30mm	C≥30mm
C4～C6	A≥200mm	B≥30mm	C≥30mm
C7	A≥200mm	B≥50mm	C≥50mm

Note: When wall-mounted E2– E6 frames use an external keypad, fieldbus control, or any other function requiring an external Ethernet-style cable or signal cable, increase clearance B as required by the cable’ s minimum bending radius. When several drives are installed, mount them side by side whenever possible to ensure proper heat dissipation. Align the tops of the units, and keep the spacing between adjacent drives no less than the clearance required for one drive.

3. 3 Wiring

- For three-phase input, connect the mains supply to L1/R, L2/S, and L3/T. Fc ingle-phase input, connect the supply to L1/R and L2/S. Connect the protective-earth terminal to ground, and connect U, V, and W to the motor.
- The motor must also be grounded. Failure to ground the motor may cause interference or hazardous voltage on the motor frame.

Figure 3-2 Power-Terminal Diagram for single-phase 2S models rated 1.5 kW and below.

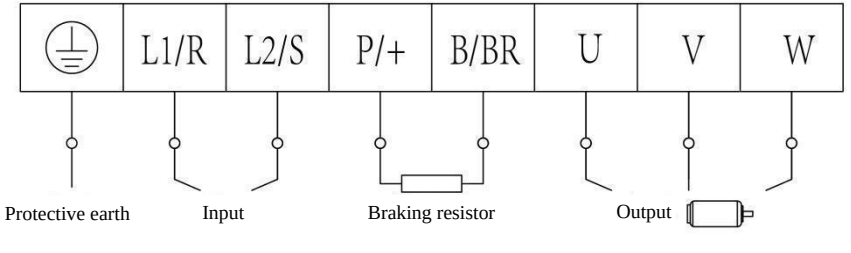

4T models rated 1.5 kW and below

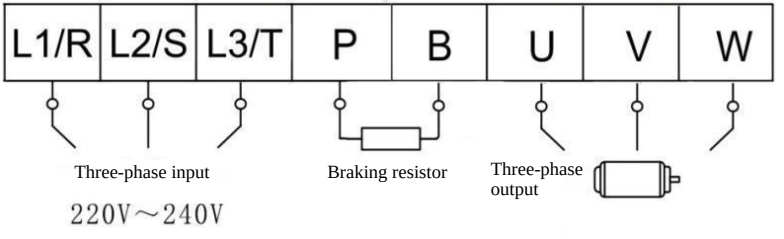

Figure 3-3 Power-Terminal Diagrams

2S 2.2kW models and 4T 2.2– 18.5kW models

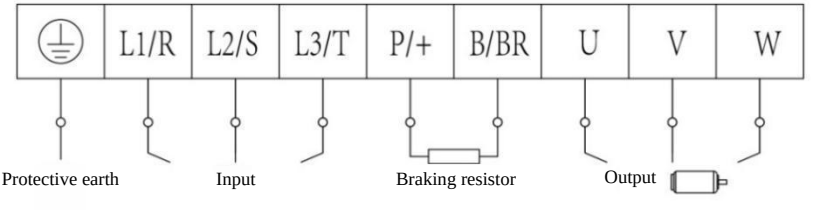

Figure 3-4 Power-Terminal Diagrams

4T 22– 45kWmodels

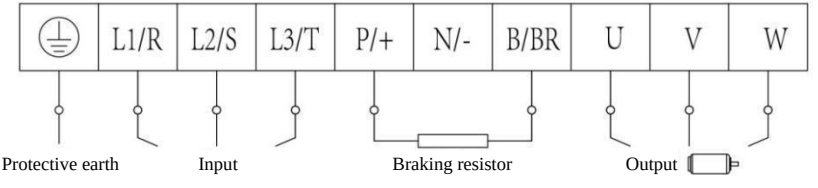

Figure 3-5 Power-Terminal Diagrams

4T 55– 75kWmodels

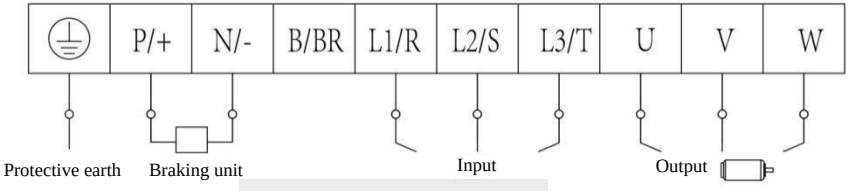

Figure 3-6 Power-Terminal Diagrams

CAUTION: The terminal drawings are schematic only. The actual power-terminal arrangement may differ from the illustrations. Always identify the terminals on the actual product before wiring.

*Reserved. The A700 currently supports only 4T three-phase 380 V models.

Power-Circuit Terminal Description

Terminal Name	Marking	Function
Power input	L1/R、L2/S、L3/T	Three-phase 400 V AC input. For single-phase 230 V, connect L1/R and L2/S.
Drive output	U、V、W	Output terminals to the motor
Protective earth	PE/E/⏚	Connect the drive to protective earth
Other terminal	P/+、B/BR	Braking-resistor connection
	P/+、N/-	Common DC-bus connection
		External braking-unit connection. Connect P/+ to terminal “P” or “DC+” of the braking unit, and N/− to terminal “N” or “DC−”.

Control-circuit terminal arrangement

TA1	TC1	TA2	TC2	24V	CM	DI1	DI2	DI3	DI4	DI5	DI6	10V	AI1	AI2	GND	AO1	AO2
GND	+5V	A+	B−														

Note: Models rated 30 kW and below do not have DO2, DI7, or DI8 control terminals.

3.4 Control-Terminal Functions

Correct and flexible use of the control terminals is essential for operating the VFD. Control terminals must be used together with the corresponding parameter settings. This section introduces their basic functions. For detailed application, also refer to the multi-function-terminal definitions in the parameter section.

Table 3-1 Control-Terminal Functions

Terminal	Category	Name	Function	
DO1	Digital output	Multi-function output 1	When the assigned function is active, the voltage between DO1 and CM is 0 V; when inactive, it is 24 V. When configured for high-speed pulse output, the maximum output frequency is 100 kHz. Because DO1 is a high-speed output, connection through an interposing relay is not recommended.	Output-terminal functions are assigned at the factory and can be changed by function codes.
TA/TA1 TB TC/TC1 TA2 TC2		Relay contacts	TC is common. TB– TC is normally closed and TA– TC is normally open. For models rated 30 kW and below, contact capacity is 3 A at 250 VAC or 3 A at 30 VDC. On dual-relay versions, TA1– TC1 and TA2– TC2 are normally open contacts.	
AO1	Analog output	Operating frequency	Connect an external frequency meter, tachometer, or ammeter; connect its negative terminal to GND. See F423– F426.	
AO2		Current indication	Connect an external ammeter; connect its negative terminal to GND. See F427– F430.	
10V	Analog supply	Internal reference supply	Internal 10 V supply. When used externally, it may only power a voltage-command circuit; maximum current is 20 mA.	
AI1 AI2	Analog input	Voltage or current input	For analog speed reference. Voltage input range: 0– 5 V or 0– 10 V. Current input range: 0– 20 mA. Input resistance: 50 Ω. Reference terminal: GND. For 4– 20 mA input, set F406=2. Select voltage/current by DIP switch and configure F438/F439 as required; see Tables 4-2 and 4-3. Factory defaults: AI1 = 0– 10 V; AI2 = 0– 20 mA current input.	
GND	Analog ground	Self-powered ground	Common for external analog voltage/current control signals and for the internal 10 V supply.	
24V	power supply	Control supply	24 V ±1.5 V control power supply; common is CM. Maximum external current: 50 mA.	

DI1	Digital input	Jog	When active, the drive operates in jog mode. Terminal jog is valid both while stopped and while running. If DI1 is assigned as the pulse frequency-reference input, it can accept high-speed pulses up to 100 kHz.	The input-terminal functions shown above are factory defaults and may be reassigned through function codes.
DI2		External emergency stop	When active, the keypad displays “ESP”.	
DI3		Forward run	When active, the drive runs forward.	
DI4		Reverse run	When active, the drive runs in reverse.	
DI5		Reset	Apply an active signal during a fault to reset the drive.	
DI6		Coast to stop	Apply an active signal while running to block the drive output and allow the motor to coast to a stop.	
CM	Common	Control-supply common	Common for the 24 V supply and other digital control signals.	
A+	RS-485	Positive differential signal	Complies with TIA/EIA-485 (RS-485). Supported Modbus baud rates: 1200, 2400, 4800, 9600, 19200, 38400, and 57600 bit/s.	
B−		Negative differential signal		

Note: Models rated 30 kW and below do not have DO2, DI7, or DI8 control terminals.

Digital-Input Wiring

Use shielded cable wherever possible and keep the wiring as short as practicable. When an externally powered active signal is used, apply suitable filtering to prevent power-supply crosstalk. Dry-contact control is recommended.

The digital inputs support either NPN (sinking/common-source) or PNP (sourcing/common-drain) wiring. For NPN wiring, set the selector switch on the control board to “NPN”.

1、 Passive NPN (sinking) wiring

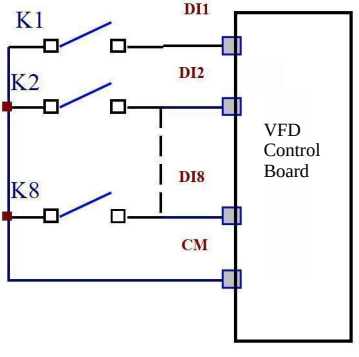

2、 Active NPN (sinking) wiring

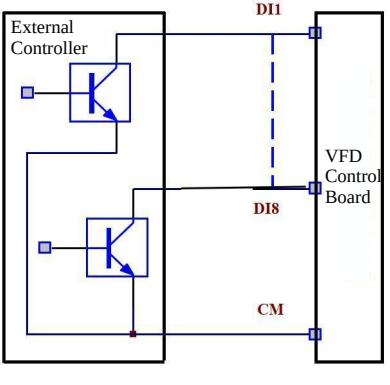

To use PNP (sourcing/common-drain) wiring, move control-board selector J7 to the "PNP" position.

3、 Passive PNP (sourcing) wiring

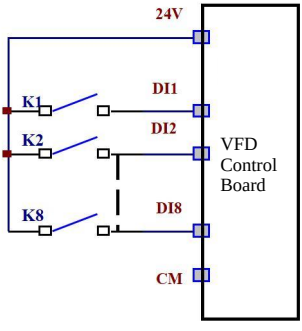

4、 Active PNP (sourcing) wiring

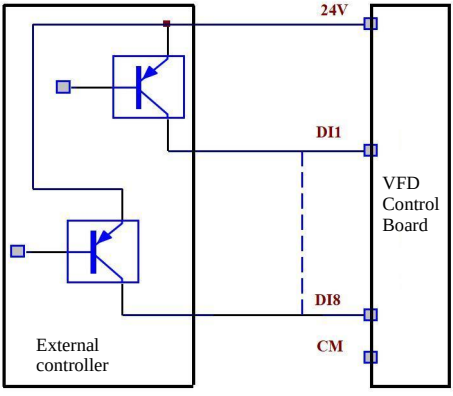

NPN wiring is the most commonly used method and is the factory-default configuration. Select NPN or PNP according to the application.

Selecting NPN or PNP for the Drive Digital Inputs

1、Selector switch J7 is located near the drive control terminals; see Figure 3-8.



Figure 3-8 Selector Switch J7

2、With J7 in the "NPN" position, shorting a DI terminal to CM activates the assigned function. With J7 in the "PNP" position, shorting a DI terminal to 24V activates the assigned function.

3.5Measuring Main-Circuit Voltage, Current, and Power

The input-side and output-side voltages and currents of a VFD contain high-frequency components. M easurement results therefore depend on the type of instrument and the measurement circuit used. When using power-frequency instruments, use the recommended instruments listed on the following page and connect th em as shown in the diagram.

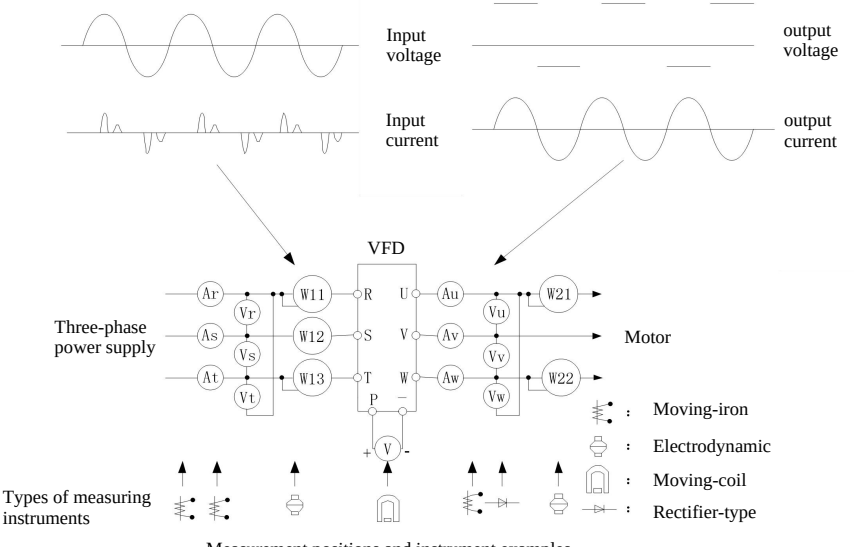

Measurement positions and instrument examples

Table 3-2 Recommended Measuring Instruments

Measured Item	Measurement Point	Instrument	Reference / Remarks
Supply voltage V1	Between R– S, S– T, and T– R	Moving-iron AC voltmeter	
Input current I1	Line current in R, S, and T	Moving-iron AC ammeter	
Input power P1	R, S, T and line-to-line voltages R– S, S– T, T– R	Electrodynamic single-phase wattmeters	P1 = W11 + W12 + W13 (three-wattmeter method)
Input power factor Pf1	Measure supply voltage, input current, and input power | Calculation for a three-phase supply $Pf1 = \frac{P1}{\sqrt{3}V1 \times I1} \times 100\%$		
Output voltage V2	Between U– V, V– W, and W– U	Rectifier-type AC voltmeter. Note 1: A moving-iron voltmeter cannot be used	Difference between phase-to-phase readings must be within ±1% of the maximum output voltage.
Output current I2	Line current in U, V, and W	Moving-iron AC ammeter. See Note 2	Current must be below rated current; difference between phase currents must be within ±10%.
Output power P2	U, V, W and line-to-line voltages U– V, V– W, W– U	Electrodynamic single-phase wattmeters	P1 = W21 + W22 (two-wattmeter method)
Output power factor Pf2	Measure output voltage, output current, and output power | Calculation for a three-phase output $Pf2 = \frac{P2}{\sqrt{3}V2 \times I2} \times 100\%$		
DC-bus voltage (rectifier output)	Between P and N/−	Moving-coil DC meter or multimeter	DC voltage, approximately $\sqrt{2} \times V1$
Control-board supply	Between 10V and GND		DC10V±0.2V
	Between 24V and CM		DC24V±1.5V
Analog output AO1	Between AO1 and GND		Approximately 10 VDC at maximum frequency
Alarm signal	Between TA– TC and TB– TC		With fault output: TA– TC open in normal condition and closed in fault condition; TB– TC closed in normal condition and open in fault condition.

3. 6 Recommended Power-Circuit Wiring

Drive Model	Conductor Cross-Section(mm^2)
A700-4T0007-E1F271B-XX	1. 5
A700-4T0015-E1F271B-XX	2. 5
A700-4T0022-E2F273B-XX	2. 5
A700-4T0030-E2F273B-XX	2. 5
A700-4T0040-E2F273B-XX	2. 5
A700-4T0055-E2F273B-XX	4. 0
A700-4T0075-E4F273B-XX	4. 0
A700-4T0110-E4F273B-XX	6. 0
A700-4T0150-E5F273B-XX	10
A700-4T0185-E5F273B-XX	10
A700-4T0220-E6F273B-XX	16
A700-4T0300-E6F273B-XX	25
A700-4T0370-E7F275N-XX	25
A700-4T0450-E7F275N-XX	35
A700-4T0550-C4F275N-XX	35
A700-4T0750-C5F275N-XX	50

Recommended Stripping Length for Clamp-Type Termination

Drive Model	Power Wiring	Strip Length（mm）	PE Wiring	Strip Length（mm）
A700-4T0007-E1F271B-XX	Clamp	7. 0	Clamp	7. 0
A700-4T0015-E1F271B-XX	Clamp	7. 0	Clamp	7. 0
A700-4T0022-E2F273B-XX	Clamp	8. 0	Clamp	8. 0
A700-4T0030-E2F273B-XX	Clamp	8. 0	Clamp	8. 0
A700-4T0040-E2F273B-XX	Clamp	8. 0	Clamp	8. 0
A700-4T0055-E2F273B-XX	Clamp	8. 0	Clamp	8. 0
A700-4T0075-E4F273B-XX	Clamp	10. 0	Clamp	10. 0
A700-4T0110-E4F273B-XX	Clamp	10. 0	Clamp	10. 0
A700-4T0150-E5F273B-XX	Clamp	10. 5	Clamp	10. 5
A700-4T0185-E5F273B-XX	Clamp	10. 5	Clamp	10. 5
A700-4T0220-E6F273B-XX	Clamp	16. 5	Clamp	16. 5
A700-4T0300-E6F273B-XX	Clamp	16. 5	Clamp	16. 5

Drive Model	Power-Terminal Screw	Power Cable Lug	PE-Terminal Screw	PE Cable Lug
A700-4T0370-E7F275N-XX	M8	GTNR25-6	M6	GTNR16-6
A700-4T0450-E7F275N-XX	M8	GTNR35-8	M6	GTNR16-6
A700-4T0550-C4F275N-XX	M8	GTNR35-8	M6	GTNR16-6
A700-4T0750-C5F275N-XX	M8	GTNR50-8	M6	GTNR25-6

Recommended Terminal Screws and Cable Lugs

3.7 Protective-Conductor Cross-Section

Cross-Section S of U/V/W Phase Conductors (mm^2)	Minimum PE Conductor Cross-Section(mm^2)
S≤16	S
16<S≤35	16
35<S	S/2

3.8 General Wiring Diagram

The figure shows a general connection diagram for the A700 Series drive. It illustrates the connection of each terminal type; not every terminal is required in every application.

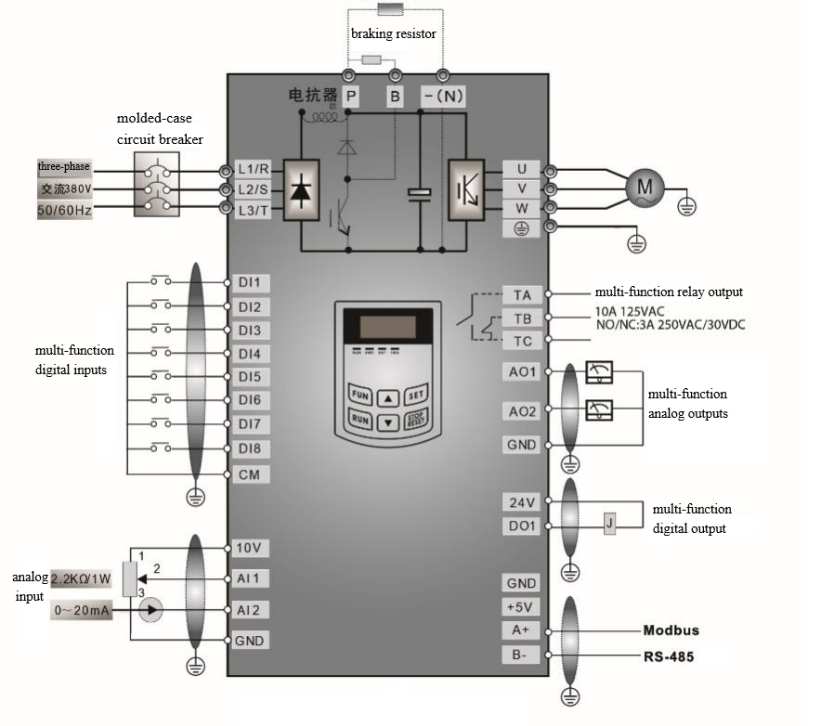

Figure: Standard Three-Phase Wiring Diagram (NPN Mode)

Note 1: For a single-phase drive, connect the mains supply only to L1/R and L2/S.

2: On models rated 30 kW and below, the 8-core modular-cable connector is for the external keypad; the RS-485 connector is located on the side control-terminal block.
3: Drives rated 37 kW and above provide eight multi-function inputs, DI1– DI8. Models below 30 kW provide six multi-function inputs, DI1– DI6.
4: Multi-function relay output: for models below 30 kW, contact capacity is 3 A at 250 VAC or 3 A at 30 VDC.
*Reserved. The A700 currently supports only 4T models.

3.9 Measures Against Conducted and Radiated Interference

The operating principle of a VFD inherently produces electrical noise and may therefore create electromagnetic-compatibility problems. To reduce or eliminate interference to surrounding equipment, this section explains noise suppression, site wiring, grounding, leakage current, and use of mains filters.

3.9.1 Noise Propagation Paths and Suppression

①、Types of Noise

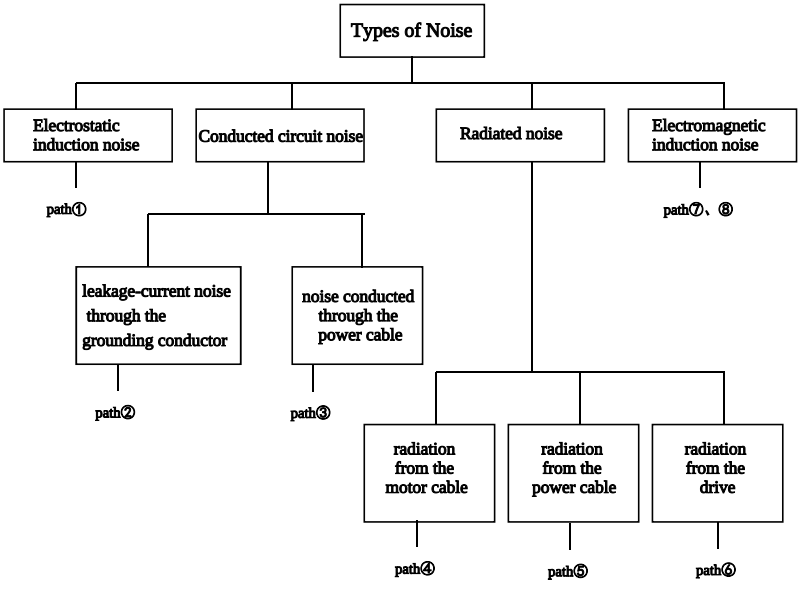

②、Noise Propagation Paths

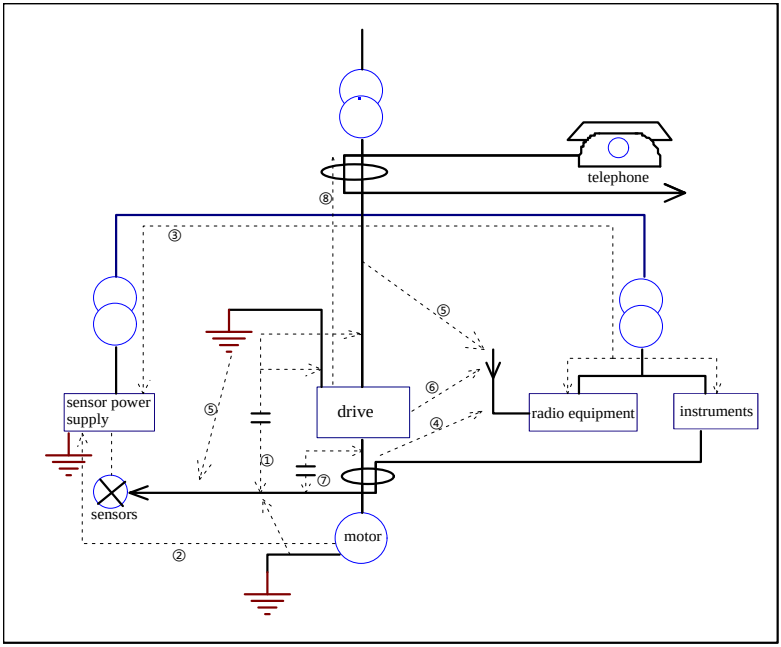

③、Basic Noise-Suppression Methods

Path	
②	When peripheral-equipment wiring and drive wiring form a closed loop, leakage current through the drive grounding conductor may cause the peripheral equipment to malfunction. In some cases, isolating the peripheral equipment from ground can reduce the malfunction; apply this only where permitted by applicable safety requirements.
③	When peripheral equipment and the drive share the same power-distribution system, noise generated by the drive may propagate through the power line and cause other equipment on the same system to malfunction. Preventive measures include: • install an EMI filter at the drive input; • isolate other equipment by means of an isolation transformer or a power-line filter.
④⑤⑥	Low-level signal equipment such as measuring instruments, radio devices, and sensors, and their signal cables, are susceptible to radiated noise when installed in the same cabinet and routed close to the drive. Apply the measures described on the following page.

④⑤⑥	1. Install susceptible equipment and signal cables as far from the drive as practicable. Use shielded signal cable, ground the shield, and route the signal cable in metal conduit. Keep it away from the drive input and output cables. Where a signal cable must cross a power cable, cross at right angles. 2. Install filters, such as ferrite common-mode chokes, on both the input and output sides of the drive to suppress radiation from the power cables. 3. Route the motor cable behind a substantial barrier, for example in metal conduit with a wall thickness of at least 2 mm or in an embedded concrete cable duct. Route power conductors in metal conduit and use shielded cable with the shield grounded.
①⑦⑧	Do not route signal cables parallel to power cables or bundle them together. Electromagnetic and electrostatic induction can couple noise into the signal cable and cause equipment malfunction. Keep susceptible equipment away from the drive, and keep sensitive signal wiring away from drive input and output cables. Using shielded signal and power cables in separate metal conduits provides better suppression; maintain at least 20 cm between the conduits.

3.9.2 Site-Wiring Requirements

To prevent mutual coupling, install control and power-supply cables separately from motor cables. Keep as much separation as possible, especially where cables run in parallel over a long distance. Where a signal cable must cross a power cable, cross at 90 degrees.

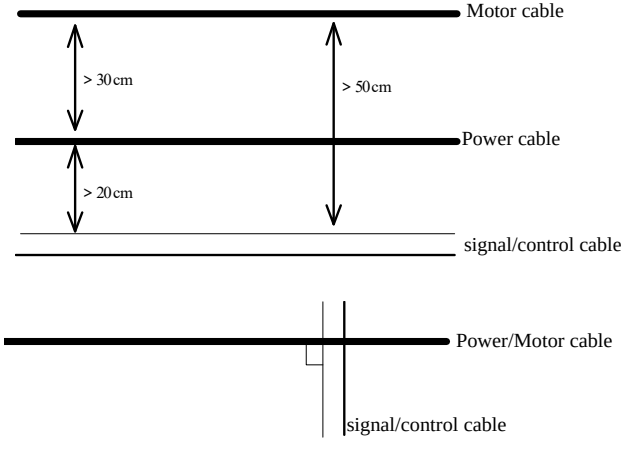

Control wiring should normally be shielded, and the cable shield should be bonded to ground with a 360-degree termination.

3.9.3 Grounding

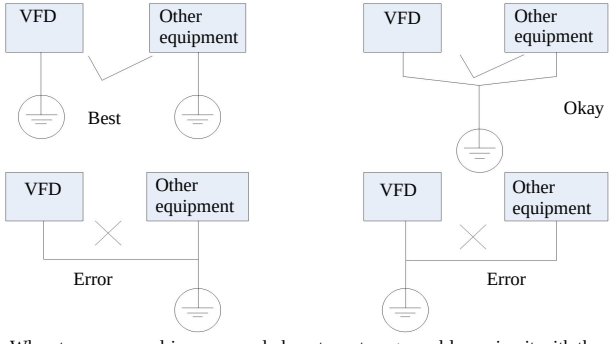

1. When two or more drives are used, do not create a ground-loop circuit with the grounding conductors.
2. To minimize grounding-system impedance, use the largest practical grounding-conductor cross-section. A flat conductor is preferable because, for the same cross-sectional area, it has lower high-frequency impedance than a round conductor.
3. If all equipment grounds are connected at one point without proper segregation, leakage current may become a noise source and affect other equipment. Separate the drive grounding connection from the grounds of audio equipment, sensors, computers, and other noise-sensitive devices.
4. Route grounding conductors away from the I/O wiring of noise-sensitive equipment and keep them as short as possible.

3.9.4 Leakage Current and Countermeasures

Leakage current flows through the distributed capacitance of the drive input/output cables and the motor.Its magnitude depends on distributed capacitance and carrier frequency. Leakage current includes ground leakage current and line-to-line leakage current.

Ground Leakage Current

Leakage current can flow not only within the drive system but also through the protective-earth conductor into other equipment. It may cause an RCD, relay, or other device to operate incorrectly. Higher carrier frequency and longer motor cable both increase leakage current.

Countermeasures:

- Reduce the carrier frequency; motor acoustic noise will increase.
- Keep the motor cable as short as possible.
- Use RCDs specifically designed for the high-harmonic and surge leakage currents produced by VFD systems.

Line-to-Line Leakage Current

Leakage current through distributed capacitance between output cable conductors contains high-frequency components that may cause an external thermal relay to operate incorrectly. This is particularly likely with small drives below 7.5 kW and long motor cables over 50 m.

Countermeasure on this page:

- Reduce the carrier frequency; motor acoustic noise will increase.

• Install an output reactor.

For reliable motor protection, direct monitoring of motor temperature with a temperature sensor is recommended. Use the drive’ s built-in electronic thermal-overload protection instead of an external thermal relay wherever appropriate.

3. 9. 5 Recommended Electrical Installation

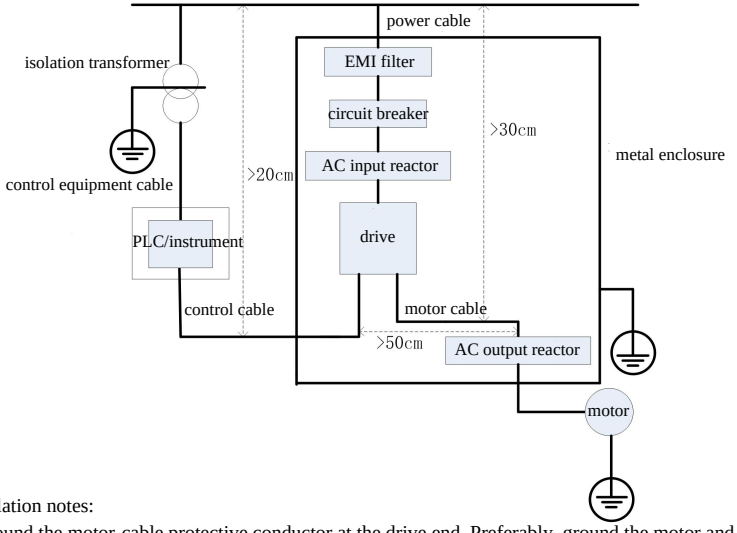

Installation notes:

• Ground the motor-cable protective conductor at the drive end. Preferably, ground the motor and the drive separately.

• Use shielded motor and control cables. Bond the cable shield braid at both ends inside the cabinet. Do not twist the shield into a pigtail, because this greatly reduces high-frequency shielding effectiveness. Use a 360-degree cable clamp.

• Ensure good electrical conductivity between the mounting plate, mounting screws, and the drive’ s metal enclosure. Use serrated paint-cutting washers and a conductive mounting plate.

3.9.6Guidelines for Using a Mains Filter

Equipment that generates strong interference and equipment sensitive to external interference should use a mains filter. A mains filter is a bidirectional low-pass filter: it passes DC and 50 Hz power-frequency current while attenuating higher-frequency electromagnetic-interference current.

Purpose of a Mains Filter

A mains filter helps the equipment meet EMC limits for conducted emissions and conducted immunity, and also helps reduce radiated emissions. It prevents interference generated by the equipment from entering the power network and prevents interference on the power network from entering the equipment.

Common Mains-Filter Installation Errors

1. Excessively long filter input wiring

Install the filter close to the cabinet power-entry point, and keep the unfiltered input cable inside the enclosure as short as possible.

2. Filter input and output cables routed too close together

If the input and output cables are close, high-frequency interference can couple directly between them and bypass the filter, making the filter ineffective.

3. Poor filter grounding

The filter housing must make a reliable low-impedance connection to the metal cabinet. Although the filter normally has a grounding terminal, connecting it to the enclosure with a long wire is ineffective at high frequencies because the wire' s high-frequency impedance is large. Mount the filter housing directly against a conductive metal surface of the equipment enclosure and remove insulating paint at the contact area.

3.9.7 Safety-Capacitor Jumper Setting

The drive contains an integrated safety-capacitor network, enabled by default at the factory. If the residual-current protection device trips when the complete machine is energized, disable the safety-capacitor connection as described below.

Jumper connector J1 is located on the drive board or input safety board. Factory setting J1 pins 1– 3 enables the safety capacitors and provides the normal EMC interference-suppression configuration.

If the RCD trips when the equipment is energized, move the shorting jumper to J1 pins 2– 4 to disable the safety capacitors.

For metal-enclosure models, refer to the illustration. The triangular mark in the shield-plate opening identifies pin 1 of J1.

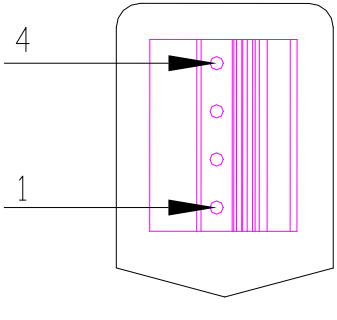

Figure: Safety-Capacitor Shorting Jumper J1

4、QUICK OPERATION AND RUNNING GUIDE

This section introduces the basic product knowledge and operating procedures required to use the drive.

4.1 Basic Product Knowledge

4.1.1 Control Modes

The A700 Series supports the following control modes:

- VVVF / V/F control: F106=2.
- Sensorless vector control (SVC): F106=0.
- Vector control 1: F106=3.
- Synchronous-motor vector control: F106=6.

4.1.2 Torque-Compensation Modes

In VVVF control, the available torque-compensation modes are:

- Linear compensation: F137=0.
- Power/quadratic-curve compensation: F137=1.
- User-defined multipoint compensation: F137=2.
- Automatic torque compensation: F137=3.
- V/F separation: F137=4.

4.1.3 Frequency-Reference Selection

See function codes F203– F207 for selection of the operating-frequency reference.

4.1.4 Run-Command Control Source

The physical command source for start, stop, jog, and other run commands is selected with F200 and F201. Five choices are available:

0. Keypad command.
1. Terminal command.
2. Keypad + terminal command.
3. Modbus communication.
4. Keypad + terminal + Modbus.

4.1.5 Drive Operating States

When energized, the drive may be in one of four states: stopped, programming, running, or fault/alarm.

Stopped State

After power-up, when automatic restart after power recovery is disabled, or after a deceleration stop, the drive remains stopped until a run command is received. The RUN indicator is OFF. The keypad display shows the status item retained from before power loss.

Programming State

The keypad can place the drive in a state in which function-code parameters can be read or modified. Changing these parameters enables different control and operating modes.
Note: If the drive enters programming mode while running, exit programming mode before attempting to stop it from the keypad.

Running State

When the drive is stopped and fault-free, receipt of a run command places it in the running state. The RUN indicator is ON during normal operation.
Note: The drive cannot run while in a fault/alarm state.

Fault/Alarm State

A fault is present and a fault code is displayed. Typical codes include OC, OE, OL1, OL2, OH, LU, PF1, and PF0, indicating overcurrent, overvoltage, drive overload, motor overload, overheat, input undervoltage, input phase loss, output phase loss, etc. See Appendix 1 for troubleshooting.

4.2 Quick Operation Guide

The keypad is standard equipment on the A700 Series. It is used for parameter setting, status monitoring, and run control. The keypad consists of a data-display area, status indicators, and operating keys. Become familiar with its functions before operating the drive.

4.2.1 Keypad Operation

1. Menu Structure

The A700 uses a three-level menu for fast viewing and modification of parameters:
Parameter group (Level 1) function code (Level 2) function-code setting (Level 3).

2. Example: Setting a Parameter

1) Press FUN to enter the programming menu.
2) Press STOP/RESET. The DGT indicator turns OFF. Use / to select a parameter group. Select the F1 group so the display reads F1xx.
3) Press STOP/RESET again. The DGT indicator turns ON, and / now selects codes within the group. Select F113, press SET to display 50.00, and use / to enter the required frequency.
4) Press SET to save the setting.

4.2.2 Switching Status Displays

In either the stopped or running state, the LED display can show selected drive status values. Choose the available items with F131 and F132, and press FUN repeatedly to cycle through them.

Stopped-State Display Items

Available items include keypad jog, target frequency, target speed, DC-bus voltage, PID feedback, temperature, and PID setpoint. See F132.

Running-State Display Items

Available items include output frequency, output speed, output current, output voltage, DC-bus voltage, PID feedback, temperature, linear speed, and PID setpoint. See F131.

4.2.3 Measuring Motor Stator Resistance

Before selecting automatic torque compensation (F137=3), enter the motor nameplate data accurately. The drive uses the nameplate values to estimate stator resistance. For improved control performance, use F800 to perform automatic stator resistance measurement and obtain the actual parameter of the connected motor.

Example motor nameplate data: Number of poles: 4. Rated power: 7.5 kW. Rated voltage: 380 V. Rated current: 15.4 A. Rated frequency: 50.00 Hz. Rated speed: 1440 r/min.

Stator Resistance Measurement Procedure：

1. Enter the motor data: F801=7.5, F802=380, F803=15.4, F804=4, F805=1440.
2. Set F800=1 to select automatic stator resistance measurement. Press RUN. “ TEST” appears. After several seconds, measurement is completed, the motor stator resistance is stored in F806, and F800 automatically returns to 0.

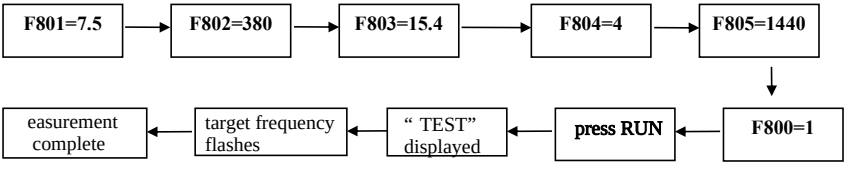

Note: Automatic torque compensation (F137=3) measures stator resistance so that low-frequency torque can be increased automatically. In this mode, one drive must not operate multiple motors. Where one drive must operate several motors, set F137 to a value other than 3.

4. 2. 4 Basic Commissioning Procedure

Table 4-1 A700 Series Commissioning Sequence

Step	Work Required	Reference
Installation environment	Installation environment | Install the drive in a location that meets the technical specifications. Verify temperature, humidity, ventilation, heat dissipation, and all other environmental conditions.	Chapters 1– 3
Drive wiring	Wire main-circuit input/output terminals, protective earth, digital control terminals, analog terminals, and communication interface.	Chapter 3
Pre-energization inspection	Verify correct input voltage and an upstream circuit breaker; reliable drive grounding; correct connection of the supply to L1/R, L2/S for single-phase or L1/R, L2/S, L3/T for three-phase; correct U/V/W motor connection; correct control-terminal wiring and external-switch preset positions; motor mechanically unloaded.	Chapters 1– 3
Power-up inspection	Check for abnormal sound, smoke, or odor. Verify normal keypad display with no fault alarm. Disconnect power immediately if any abnormal condition is found.	Appendix 1
Enter motor nameplate data and measure stator resistance	Before first operation, enter the motor nameplate data and perform stator-resistance measurement to obtain optimum control performance.	F800– F830

Set operating-control parameters	Set the drive and motor parameters correctly, including target frequency, upper/lower frequency limits, acceleration/deceleration times, and direction commands. Select the operating-control method appropriate for the application.	Relevant parameter group
No-load trial run	Disconnect the mechanical load. Start the drive from the keypad or control terminals and verify the drive system. Motor: smooth operation, correct rotation and direction, normal acceleration/deceleration, no abnormal vibration, noise, or odor. Drive: normal keypad values, fan operation, and relay sequence, with no abnormal vibration or noise. Stop immediately and inspect if any abnormality occurs.	Chapter 4
Loaded trial run	After successful no-load operation, connect the load. Start from the keypad or terminals and increase load gradually. Run at a period 50% load and then at 100% load to verify normal system operation. Monitor all conditions; stop immediately and inspect if any abnormality occurs.	
Checks during operation	Verify smooth motor rotation and correct direction; no abnormal vibration or noise; smooth acceleration/deceleration; correct drive output status and keypad display; normal cooling-fan operation; no abnormal vibration or noise. If abnormal, stop immediately, disconnect power, and inspect.	

4. 3 Basic Control Examples

The following examples use a 7.5 kW A700 drive to operate a 7.5 kW three-phase induction motor.

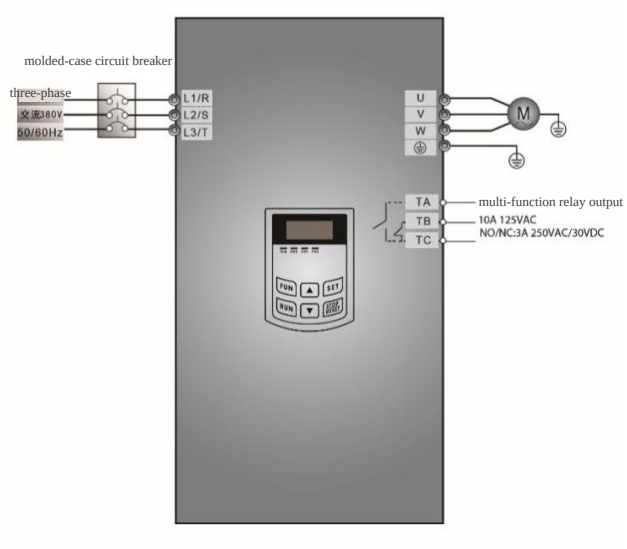

Figure 4-1 Wiring Diagram 1

Motor nameplate data: 4 poles. Rated power: 7.5 kW. Rated voltage: 400 V. Rated current: 15.4 A. Rated frequency: 50.00 Hz. Rated speed: 1440 r/min

4.3.1 Keypad Frequency Setting, Start, Forward Run, and Stop

（1）Wire the system as shown in Figure 4-1. After verifying the wiring, close the circuit breaker to energize the drive.

（2） Press FUN to enter the programming menu.

（3）If F137=3, perform motor stator resistance measurement. If F137≠3, proceed directly to Step 4.

Function Code	Setting
F800	1
F801	7. 5
F802	400
F803	15. 4
F804	4
F805	1440

Press RUN to perform motor parameter measurements. When measurement is complete, the motor stops and the measured value is stored in F806. See “Motor Stator Resistance Measurement” for details.

（4）Set the drive parameters

Function Code	Setting
F111	50. 00
F200	0
F201	0
F202	0
F203	0

（5）Press RUN to start the drive.

（6）While running, press ▲ or ▼ to change the current frequency.

（7）Press STOP/RESET once. The motor decelerates to a stop.

（8）Open the circuit breaker to remove power from the drive.

4.3.2Keypad Frequency Setting with Terminal Forward/Reverse Start and Stop

（1）Wire the system as shown in Figure 4-2. Verify the wiring, then close the circuit breaker to energize the drive.

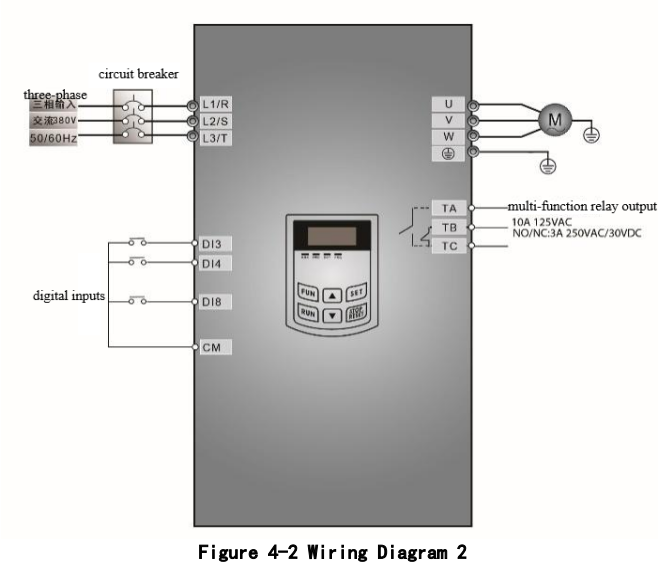

Figure 4-2 Wiring Diagram 2

（2）Press FUN to enter the programming menu.

（3）Perform motor auto-tuning using the same procedure as Example 1.

（4）Set the following parameters:

Function Code	Setting
F111	50. 00
F203	0
F208	1

（5）Close the DI3 contact. The drive starts in the forward direction.

（6）While running, use ▲/▼ to change the current frequency.

（7）To reverse direction, open DI3 and then close DI4. Set the forward/reverse dead time F120 according to load conditions. If the dead time is too short, an OC overcurrent trip may occur.

（8）Open both DI3 and DI4. The motor decelerates to a stop.

（9）Open the circuit breaker to remove power.

4.3.3Keypad Jog Operation

（1）Wire as shown in Figure 4-1, verify wiring, and energize the drive.

（2）Press FUN to enter the programming menu.

（3）Perform motor parameter measurement as described in Example 1.

（4）Set；

Function Code	Setting
F124	5. 00
F125	30
F126	30
F132	1
F202	0

（5）Press and hold RUN. The motor accelerates to the jog frequency and remains in jog operation.

（6）Release RUN. The motor decelerates and jog operation stops.

（7）Open the circuit breaker to remove power.

4.3.4Analog Frequency Reference with Terminal Based Run Control

（1）Wire the system as shown in Figure 4-3. Verify the wiring and energize the drive.

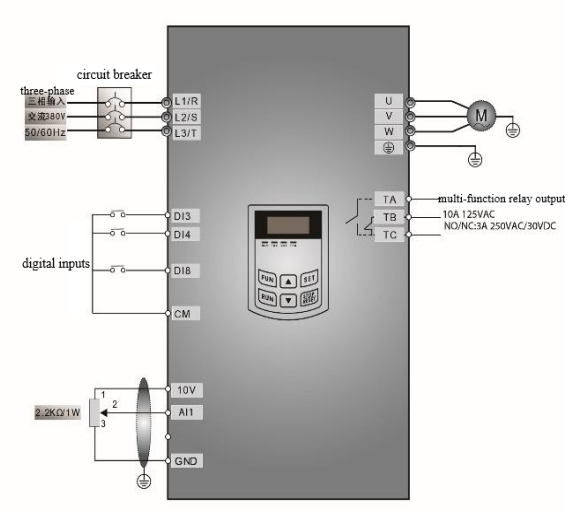

Figure 4-3 Wiring Diagram 3

（2）Press FUN to enter the programming menu.

（3）Perform motor auto-tuning as in Example 1.

（4）Set：

Function Code	Setting
F203	1
F208	1

（5）For A700 drives rated 30 kW and below, a two-position black DIP switch SW1 is located near the control-terminal block, as shown in Figure 4-4. It selects voltage input (0– 5 V / 0– 10 V) or current input for analog terminal AI2. The factory default is current input. Select the analog-input channel with F203 and set the signal type with F439. To use a 0– 20 mA current reference, set switch 1 to ON and switch 2 to ON as illustrated. Other switch positions are listed in Table 4-2.

（6）For A700 drives rated 37 kW and above, a four-position black DIP switch SW1 is located near the control-terminal block, as shown in Figure 4-5. It selects the AI1 and AI2 input ranges: 0– 5 V, 0– 10 V, or 0– 20 mA. Select the input channel with F203 and select voltage or current input with F438/F439. The factory switch positions shown in Figure 4-5 configure AI1 for 0– 10 V and AI2 for 0– 20 mA. See Table 4-3 for other settings.

（7）While running, adjust the reference potentiometer to change the target frequency.

（8）To reverse direction, open DI3 and close DI4.

（9）Open DI3 and DI4. The motor decelerates to a stop.

（10）Open the circuit breaker to remove power.

（11）The A700 provides analog outputs AO1 and AO2. AO2 outputs current only. AO1 can output either voltage or current; select the output type with J5. See Figure 4-6 and Table 4-4.

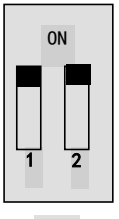

SW1

Figure 4-4

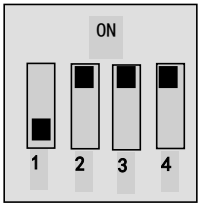

SW1

Figure 4-5

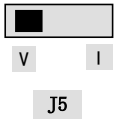

J5

Figure 4-6

Table 4-2 DIP-Switch and Parameter Settings for Analog Speed Reference — Models Rated 30 kW and Below

For F203=2, AI2 selected:				For F203=1, AI1 selected
Function Code	SW1			
F439	SW1-1	SW1-2	Signal Type	
0	OFF	OFF	0～5V	0– 10 V voltage input
0	OFF	ON	0～10V	
1	ON	ON	0～20mA	

Table 4-3 DIP-Switch and Parameter Settings for Analog Speed Reference — Models Rated 37 kW and Above

AI1, F203=1					AI2, F203=2			
Function	SW1		S1 Polarity	Analog Range	Function	SW1		
F438	SW1-1	SW1-3			F439	SW1-2	SW1-4	Analog Range
0	OFF	OFF	+	0～5V	0	OFF	OFF	0～5V
0	OFF	ON	+	0～10V	0	OFF	ON	0～10V
1	ON	ON	+	0～20mA	1	ON	ON	0～20mA
0	OFF	ON	−	-10～10V				
Reserved	OFF	OFF	−	Reserved				
Reserved	ON	ON	−	Reserved				
ON means the DIP switch is in the upper position; OFF means it is in the lower position.								

Table 4-4 AO1 Output Selection by J5 and F423

AO1		F423		
		0	1	2
J5 Position	V	0～5V	0～10V	Reserved
	I	Reserved	0～20mA	4～20mA

5 FUNCTION PARAMETERS

5.1 Basic Parameters

F100 User Password	Setting range: 0– 9999	Factory default: 0

When password protection is enabled by F107=1, the correct password must be entered after power-up or fault reset before parameters can be changed. Otherwise parameter setting is disabled and “Err1” is displayed.
Related codes: F107 Password Protection Enable; F108 User Password Setting.

F102 Drive Rated Current (A)		Factory default: according to model
F103 Drive Rated Power (kW)		Factory default: according to model

·Users can view the rated current and rated power of the frequency converter, but cannot modify them.

F105 Software Version		Factory default: according to model

·Users can view the software version number of the frequency converter and cannot modify it.

F106 Control Mode	Setting range: 0: Sensorless vector control (SVC). 2: V/F control. 3: Vector control 1. 6: PMSM sensorless vector control.	Factory default: 2

Mode descriptions:

0 — SVC: general high-performance drive applications. One drive may operate only one motor.

2 — VVVF / V/F control: applications with modest dynamic-response and control-accuracy requirements.

6 — PMSM sensorless vector control: position/speed-sensorless control of a general-purpose AC permanent-magnet synchronous motor without starting/damper windings. One drive shall operate only one motor.

Important:

1. Before operating in vector mode, F106=0, 3, or 6, perform motor parameter identification.
2. In vector mode, one drive must operate only one motor. Motor and drive capacities should not differ greatly; otherwise performance may deteriorate or operation may fail.
3. With F106=0, upper frequency F111 must not exceed 500.00 Hz.
4. If accurate manufacturer motor data is available, it may be entered manually.
5. The motor will usually run with factory defaults, but optimum performance is not guaranteed. Motor auto-tuning is recommended before vector operation.
6. To prevent malfunction and motor damage, F641 must not be enabled during vector control or automatic torque compensation.

F107 Password Protection Enable	0: Disabled; 1: Enabled	Factory default: 0
F108 User Password Setting	Setting range: 0– 9999	Factory default: 8

- F107=0: parameters can be modified without a password.
- F107=1: enter the password through F100 before modifying parameters.
- Change the user password with F108 in the same way as other parameters.
- Enter the value stored in F108 into F100 to unlock parameter editing.

Note: When F107=1 and the password has not been unlocked, reading F108 displays 0.

F109 Starting Frequency (Hz)	Setting range: 0.00– 10.00	Factory default: 0.00
F110 Starting-Frequency Hold Time (s)	Setting range: 0.0– 999.9	Factory default: 0.0.

Starting-frequency operation:

- The starting frequency is the initial output frequency. If the target frequency is lower than the starting frequency, the starting-frequency setting is not used.
- The drive starts at F109, holds it for F110, then accelerates/decelerates to the target frequency. The hold time is not included in the acceleration/deceleration time.
- F109 is not limited by lower frequency F112 during starting. After starting, normal operation is limited by F111 and F112.
- F109 must be below upper frequency F111.
- F109 and F110 are disabled during speed search.

F111 Upper Frequency (Hz)	Setting range: F113– 590.0	Factory default: 50.00
F112 Lower Frequency (Hz)	Setting range: 0.00– F113	Factory default: 0.50

F111 sets the highest permitted operating frequency.
F112 sets the lowest permitted operating frequency.
F112 must be below target frequency F113.
If the commanded frequency falls below F112 during operation, the drive continues at F112 until stopped or until the command rises above F112. Set the limits carefully according to the motor nameplate and application; prolonged low-frequency operation may overheat the motor.

F113 Target Frequency (Hz)	Setting range: F112– F111	Factory default: 50.00

This is the preset frequency and the initial digital reference when the main frequency source is digital. With keypad or terminal digital adjustment, the drive automatically accelerates to this value after starting. Example: with factory defaults, pressing RUN after power-up accelerates the drive from 0 Hz to 50.00 Hz.

F114 First Acceleration Time (s)	Setting range: 0.1– 3000	Factory default: according to model
F115 First Deceleration Time (s)		
F116 Second Acceleration Time (s)		
F117 Second Deceleration Time (s)		
F277 Third Acceleration Time (s)		
F278 Third Deceleration Time (s)		
F279 Fourth Acceleration Time (s)		
F280 Fourth Deceleration Time (s)		

The acceleration/deceleration reference is selected by F119. During speed search, acceleration/deceleration time, lower frequency, and target frequency are temporarily ineffective. After search is complete, the drive uses the selected ramp time to reach the target frequency.

F119 Acceleration	F119 Acceleration/ Deceleration Time Reference 0: 0– 50.00 Hz. 1: 0– F111.	Factory default: 0

- F119=0: acceleration time is 0 to 50.00 Hz; deceleration time is 50.00 to 0 Hz.
- F119=1: acceleration time is 0 to F111; deceleration time is F111 to 0 Hz.

F120 Forward/Reverse Switching Dead Time (s)	Setting range: 0.0– 3000	Factory default: 0.0

- A stop command cancels the waiting time. This function applies to all speed-control methods except automatic-cycle operation.
- It reduces current impact during direction reversal.
- It is disabled during speed search and becomes effective after search is completed.

F122 Reverse Operation Prohibited	0: Disabled; 1: Enabled	Factory default: 0

- When F122=1, reverse operation and forward/reverse switching are prohibited. A reverse command produces a stopped state. If reverse is locked by F202=1, the drive produces no output regardless of speed-search selection.
- When F122=1, F613=1, and F614≥2, if a forward command is received while the motor is still coasting in reverse, the drive identifies the direction, decelerates the reverse rotation to 0.0 Hz, and then runs forward.

F123 Negative Frequency in Combined Reference	0: Disabled; 1: Enabled	Factory default: 0

- When a combined-reference calculation is negative, F123=0 causes 0 Hz operation; F123=1 causes reverse operation at the calculated magnitude. This function is subject to F122.

F124 Jog Frequency (Hz)	Setting range: F112– F111	Factory default: 5.00
F125 Jog Acceleration Time (s)	Setting range: 0.1– 3000	Factory default: according to model
F126 Jog Deceleration Time (s)		

Jog Operation

• Keypad jog and terminal jog are separate. Keypad jog is valid only while stopped and requires F132 to in clude the keypad-jog display item. Terminal jog is valid both while stopped and while running.

• Keypad jog: while stopped, press FUN until "HF-0" is displayed, then press and hold RUN. The drive accelerates to F124. Pressing FUN again cancels keypad-jog mode.

• Terminal jog: short the assigned jog terminal, for example DI1, to CM. The drive runs at F124.

• Speed search is disabled during jog operation.

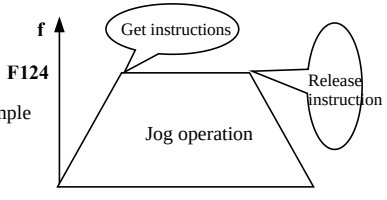

Figure 5-1 Jog operation

F127/F129 Skip-Frequency Points A/B (Hz)	Setting range: 0.00– 590.0	Factory default: 0.00.
F128/F130 Skip-Frequency Bands A/B (Hz)	Setting range: 0.00– 2.50	Factory default: 0.00.

Related codes: F316– F323.

Skip-frequency operation avoids mechanical resonance near specified frequencies. When the output reaches a skip point, the drive automatically bypasses the defined band. Example: point 20 Hz and width ±0.5 Hz produces a skipped range of 19.5 – 20.5 Hz. By default, the drive passes through the band during acceleration/deceleration and skips it only at steady speed. The function is disabled during speed search and becomes effective afterward.

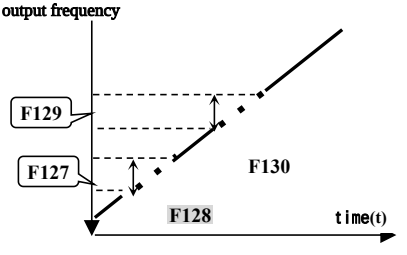

Figure 5-2 Skip-Frequency Diagram

F131 Running Display Selection	Setting range: 0: Output frequency / function code. 1: Output speed (r/min). 2: Output current (A). 4: Output voltage (V). 8: DC-bus voltage (V). 16: PID feedback (%). 32: Temperature (°C). 64: Count value. 128: Linear speed. 256: PID setpoint (%). 512: Reserved. 1024: Reserved. 2048: Output power (kW). 4096: Output torque (%).	Factory default: 0+1+2+4+8 = 15

Add the required bit values to display multiple items. Example: speed + current + PID feedback = 1+2+16 = 19. Other items are hidden. The source states that F131=511 enables all listed standard display items; frequency/ function code can always be viewed. Press FUN to cycle through selected items. While stopped, the target frequency flashes regardless of F131.

Display formats:

- Speed: integer; if over 9999, a decimal point is appended to the last digit.
- Current: A*.*.
- DC-bus voltage: U***.
- Output voltage: u***.
- Count: ****.
- Temperature: H**.
- Linear speed: L***; decimal-point positions indicate values above 999 and 9999.
- PID setpoint: o*.*; PID feedback: b*.*; output power and output torque: *.*.

F132 Stopped Display Selection	0: Frequency / function code. 1: Keypad jog. 2: Target speed (r/min). 4: DC-bus voltage (V). 8: PID feedback (%). 16: Temperature (°C). 32: Count value.	Factory default: 0+2+4 = 6

F132 Stopped Display Selection	64: PID setpoint (%). 128: Reserved. 256: Reserved. 512: Torque setpoint (%)	
F133 Driven-System Transmission Ratio	Setting range: 0.10– 200.0	Factory default: 1.00
F134 Drive-Wheel Radius (m)	Setting range: 0.001– 1.000	Factory default: 0.001

Speed and Linear-Speed Calculation Example

Given F111=50.00 Hz, motor poles F804=4, transmission ratio F133=1.00, and drive-shaft radius R=0.05 m:

- Circumference = $2\pi R = 2 \times 3.14 \times 0.05 = 0.314$ m.
- Shaft speed = 60 × frequency / (pole pairs × ratio) = 60 × 50 / (2 × 1.00) = 1500 r/min.
- Final linear speed = speed × circumference = 1500 × 0.314 = 471 m/min.

F136 Slip Compensation	Setting range: 0– 10	Factory default: 0

In VVVF control, rotor speed decreases as load increases. Slip compensation adds a frequency correction so rotor speed remains closer to synchronous speed at rated load. It is disabled during speed search and is effective while the drive ramps to the target frequency during voltage recovery.

F137 Torque-Compensation Mode	0: Linear. 1: Power/quadratic curve. 2: User-defined multi-point compensation. 3: Automatic torque compensation. 4: V/F separation.	Factory default: 0
F138 Linear Compensation	Setting range: 1– 20	Factory default: according to model
F139 Power-Curve Compensation	1: 1.5-power curve. 2: 1.8-power curve. 3: 1.9-power curve. 4: Square-law curve. 5: Reserved.	Factory default: 1

To compensate low-frequency torque characteristic in VVVF control, the VFD output voltage can be boosted at low frequencies.

F137=0 Select linear compensation, which is suitable for general constant-torque loads.

F137=1 Select power-curve compensation, which is suitable for loads such as fans and water pumps.

F137=2 select user-defined multi-point compensation, which is suitable for special loads such as dewater ing machines and centrifuges.

Increase the setting for heavier loads and reduce it for lighter loads. Excessive boost can overheat the motor and cause drive overcurrent; adjust gradually while monitoring motor current.

Automatic Torque Compensation and V/F Separation

• F137=3 automatically adjusts low-frequency torque, reduces motor slip, brings rotor speed closer to synchronous speed, and can suppress oscillation. Accurately enter motor power, speed, pole count, rated current, and stator resistance. Stator resistance may be obtained by automatic measurement; see the motor auto-tuning procedure.

• F137=4 separates output voltage from output frequency. Frequency is determined by the selected frequency source, while voltage is determined by the V/F-separation voltage-reference channel F671.

• Torque compensation is disabled during speed search and is effective during the ramp to the target frequency in voltage-recovery operation.

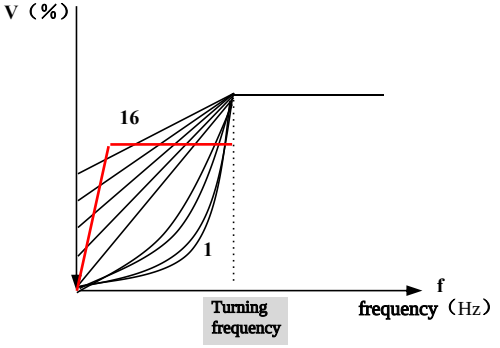

Figure 5-3 Torque boost schematic diagram

F140 Voltage-Compensation Break Frequency (Hz)	0～F142	default 1.00
F141 Voltage Compensation 1 (%)	0～30	default according to model
F142 Frequency Point F2 (Hz)	F140～F144	default 5.00
F143 Voltage Point V2 (%)	0～100	default 13
F144 Frequency Point F3 (Hz)	F142～F146	default 10.00
F145 Voltage Point V3 (%)	0～100	default 24
F146 Frequency Point F4 (Hz)	F144～F148	default 20.00
F147 Voltage Point V4 (%)	0～100	default 45
F148 Frequency Point F5 (Hz)	F146～F150	default 30.00
F149 Voltage Point V5 (%)	0～100	default 63
F150 Frequency Point F6 (Hz)	F148～F810	default 40.00
F151 Voltage Point V6 (%)	0～100	default 81

F140– F151 define the multi-point VVVF curve. Set them according to the motor load characteristic.

Requirements and cautions:

- V2 < V3 < V4 < V5 < V6, and F2 < F3 < F4 < F5 < F6.
- Excessive low-frequency voltage can overheat or burn the motor and can cause overcurrent stall or overcurrent protection in the drive.
- The multi-point V/F curve is disabled during speed search and becomes effective after search is complete.

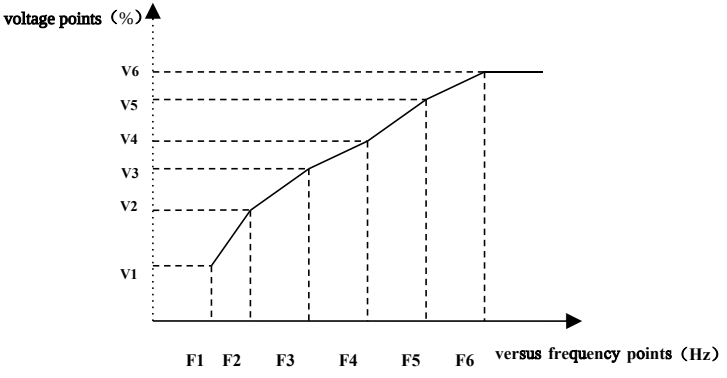

Figure 5-4 Multi-point VVVF Curve

F152 Output Voltage at Break Frequency (%)	Setting range: 0– 100	Factory default: 100

- Special example: for 300 Hz output at 200 V from a 380 V supply, set motor rated frequency F810=300 Hz and F152=(200/380)×100=52.6, rounded to 53.
- Observe the motor nameplate. Do not exceed rated voltage or rated frequency.

F153 Carrier-Frequency Setting	Setting range and default: according to model

Carrier-frequency adjustment can reduce motor acoustic noise, avoid mechanical resonance, reduce earth-leakage current, and reduce drive-generated interference.

- Lower carrier frequency: more motor noise, greater motor loss and temperature rise, lower earth-leakage current, and lower drive temperature rise.
- Higher carrier frequency: less motor noise and motor loss, lower motor temperature rise, but greater drive loss, drive temperature rise, leakage current, and interference.
- For high output-frequency operation, increase the carrier frequency appropriately.

Effect of Carrier Frequency

Carrier frequency	low → high
Motor acoustic noise	high → low
Output-current waveform	poorer → better
Motor temperature rise	high → low
Drive temperature rise	low → high
Leakage current	low → high
Radiated interference	low → high

F154 Automatic Voltage Regulation (AVR)	0: Disabled. 1: Always enabled. 2: Disabled only during deceleration	Factory default: 0

AVR stabilizes output voltage when input voltage changes. Its internal PI regulator may lengthen deceleration time. Where deceleration-time accuracy is critical, select F154=2 to disable AVR during deceleration.

F155 Digital Auxiliary Frequency (Hz)	Setting range: 0– F111	Factory default: 0
F156 Digital Auxiliary-Frequency Polarity	Setting range: 0– 1	Factory default: 0
F157 Auxiliary-Frequency Monitor		
F158 Auxiliary-Frequency Polarity Monitor		

When F204=0 selects stored digital auxiliary reference in combined-frequency control, F155 provides the initial auxiliary-frequency magnitude and F156 provides its polarity/direction. F157 and F158 display these values.

Example: F203=1, F204=0, F207=1. If AI1 commands 15 Hz but 20 Hz is required, use ▲/▼ to add 5 Hz or set F155=5 Hz directly. F156=0 indicates forward; F156=1 indicates reverse.

F159 Random-Carrier Selection	0: Disabled; fixed carrier set by F153. 1: Enabled; random carrier.	Factory default: 1

Random carrier can increase output torque but can also increase noise. Fixed carrier reduces noise but may reduce torque. Select according to the application.

F160 Restore Factory Defaults	0: Do not restore. 1: Restore factory defaults.	Factory default: 0.

Restoring Factory Defaults

If parameter settings become inconsistent, set F160=1. After restoration is completed, F160 automatically returns to 0.

Factory restoration does not change function codes marked " ○" in the change column of the parameter table. These codes are factory-calibrated and should normally not be modified.

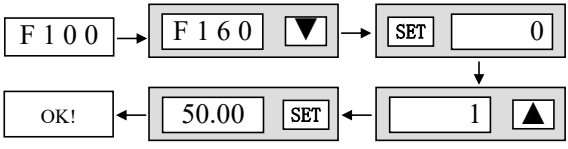

Figure 5-5 Restore Factory Defaults

5.2 RUN CONTROL

F200 Start-Command Source	Setting range for each: 0: Keypad. 1: Terminals. 2: Keypad + terminals. 3: Modbus. 4: Keypad + terminals + Modbus.	Factory default: 4
F201 Stop-Command Source	Setting range for each: 0: Keypad. 1: Terminals. 2: Keypad + terminals. 3: Modbus. 4: Keypad + terminals + Modbus.	Factory default: 4

F200/F201 select the source of start, stop, forward, reverse, jog, and related commands.

- Keypad commands use RUN and STOP/RESET.
- Terminal commands use terminals assigned " Run" , " Stop" , or " Start/Stop" by F316– F323. For example, short an assigned Run terminal to CM to start.
- With value 3, commands are issued by a host controller through communication.
- With value 2 or 4, the listed sources are simultaneously valid.

Note: " Terminal command" here does not include the DI coast-to-stop input; it includes only Run, Stop, and Start/Stop functions.

F202 Direction Command	0: Forward locked. 1: Reverse locked. 2: Terminal command.	Factory default: 0

F202 determines direction alone or in combination with a reference source that also contains direction information. It is ignored during automatic multi-step cycling (F500=2) and whenever F208≠0.

- With a reference method that has no direction information, F202 alone determines direction.
- With a reference method that includes direction, the final direction is the logical combination shown below:

F202 Direction	Other Direction	Final Direction	Remarks
0	0	0	0 = forward; 1 = reverse
0	1	1	
1	0	1	
1	1	0	

F203 Main Frequency Source X	0: Stored digital reference. 1: External analog AI1. 2: External analog AI2. 3: Pulse input. 4: Multi-step speed. 5: Non-stored digital reference. 6: Analog AI3. 7: Reserved. 8: Reserved. 9: PID control. 10: Modbus.	Factory default: 0

0 —Stored Digital Reference
Initial value is F113. Adjust with keypad ▲/▼ or assigned UP/DOWN terminals. The target frequency after stopping remains the last running value. . To retain the value through power loss, set F220=1.

1/2 —Analog AI1 or AI2
Frequency is determined by AI1 or AI2. Supported current signals: 0– 20 mA or 4– 20 mA; voltage signals: 0– 5 V or 0– 10 V. Set the DIP switches as described in Chapter 4. Factory defaults: AI1=0– 10 V; AI2=0– 20 mA. For 4– 20 mA, configure the input lower limit as described under F406. Input resistance is 50 Ω.

3 —Pulse Input
The frequency reference is applied only to DI1, up to 100 kHz. See F440– F446.

4 —Multi-Step Speed
Assign multi-step inputs with F316– F323 and configure the F5 parameter group. Frequency is selected by the step-input combination or by automatic cycling.

5 —Non-Stored Digital Reference
Initial value is F113 and can be adjusted by ▲/▼ or UP/DOWN terminals. After stopping or power cycling, the target returns to F113 regardless of F220.

6 —Analog AI3
Frequency is set by the keypad potentiometer. For a remote-keypad potentiometer, also set F422=1.

9 —PID ControlOperating frequency is the PID controller output. See the FA PID parameter group for setpoint and feedback selection.

10 —Modbus

The host controller supplies the main frequency through Modbus by writing F113.

F204 Auxiliary Frequency Source Y	0: Stored digital reference. 1: External analog AI1. 2: External analog AI2. 3: Pulse input. 4: Multi-step speed. 5: PID control. 6: Analog AI3.	Factory default: 0

When Y is used as an independent reference, operation is the same as for main source X.

- With F204=0, the initial value is F155. F156 polarity is ignored when Y is used independently.
- With F207=1 or 3 and F204=0, F155 sets the auxiliary magnitude, F156 the direction, and F157/F158 monitor them.
- For analog Y from AI1/AI2, its range is determined by F205 and F206.
- X and Y must not be assigned the same reference channel.

F205 Auxiliary Range Reference	0: Relative to upper frequency F111. 1: Relative to main reference X.	Factory default: 0
F206 Auxiliary Range (%)	Setting range: 0– 100	Factory default: 100

F205/F206 determine the auxiliary-frequency adjustment range in combined-reference operation. When relative to X, the range changes with X.

F207 Frequency-Source Combination	0: X. 1: X+Y. 2: X or Y, selected by terminal; X has priority when not switched. 3: X or X+Y, selected by terminal. 4: Multi-step speed and analog combination. 5: X−Y. 6: X+Y−YMAX×50%. 9: X/Y. 10: Max(X,Y). 11: Min(X,Y).	Factory default: 0

F207 Operation

- 0: Target frequency = X.
- 1: X+Y; either X or Y may be PID.
- 2: Switch between X and Y through a multi-function terminal assigned Frequency Source Switch.
- 3: Switch between X and X+Y; neither X nor Y may be PID
- 4: Multi-step reference from X has priority over analog Y. Applicable only to F203=4, F204=1.
- 5: X−Y; neither source may be PID.
- 6: X+Y−YMAX×50%; neither source may be PID. If F205=0, YMAX=F111×F206; if F205=1, YMAX=X×F206. F206 is applied as a percentage in the calculation.
- 9: X divided by Y.
- 10: Greater of X and Y.
- 11: Lesser of X and Y.

Notes:

1. With F203=4 and F204=1, F207=1 adds multi-step and analog references. With F207=4, the multi-step value has priority while present; when removed, the drive follows the remaining analog reference.
2. F207 supports switching between PID and analog, multi-step and analog, keypad and analog, and other reference combinations.
3. Multi-step acceleration/deceleration times are set by their corresponding step parameters.
4. When multi-step speed participates in a combined reference, its own ramp times take priority. If no step signal is present at power-up, F114/F115 apply. When the step signal is removed, the ramp time of the previous step remains active.
5. Automatic cycling can operate only independently and cannot be combined with other references.
6. With F207=2, if X is not multi-step, Y may be configured as automatic cycle (F204=4, F500=2), allowing terminal switching between X operation and automatic-cycle operation.
7. If X and Y are assigned the same source, only X is effective.
8. Examples for F207=6 and F206=100%:

- F205=0: X+Y−F111×50%.
- F205=1: X+Y−X×50%.

F208 Two-Wire / Three-Wire Terminal Control	0: Other control method. 1: Two-wire mode 1. 2: Two-wire mode 2. 3: Three-wire mode 1. 4: Three-wire mode 2. 5: Direction-pulse start/stop.	Factory default: 0

When F208 selects a two-wire or three-wire mode, F200, F201, and F202 are ineffective. For multi-step speed control, normally set F208=0. FWD, REV, and X are functions assigned to DI terminals through F316– F323.

1 —Two-Wire Mode 1

The most common two-wire mode. FWD and REV directly command direction.

- FWD open: stop; closed: forward.
- REV open: stop; closed: reverse.
- CM: common.

K1 (FWD)	K2 (REV)	Command
0	0	Stop
1	0	Forward
0	1	Reverse
1	1	Stop

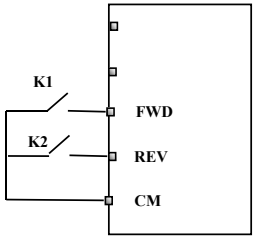

2 —Two-Wire Mode 2

FWD is the run enable; REV selects direction.

- FWD open: stop; closed: run.
- REV open: forward; closed: reverse.
- CM: common.

K1 (FWD)	K2 (REV)	Command
0	0	Stop
0	1	Stop
1	0	Forward
1	1	Reverse

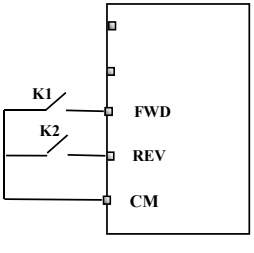

3 —Three-Wire Mode 1

X is the enable/stop input. FWD and RE

V are momentary direction commands.

Open X to stop.

- SB3: Stop button.
- SB2: Forward button.
- SB1: Reverse button.

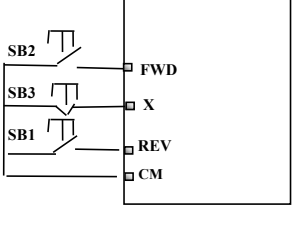

4 —Three-Wire Mode 2

X is the enable/stop input. FWD gives the run command and REV selects direction. Open X to stop.

- SB1: Run button.
- SB2: Stop button.
- K1 direction switch: open = forward; closed = reverse.

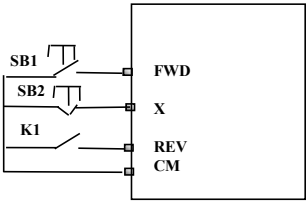

5 —Direction-Pulse Start/Stop

- FWD: pulse toggles forward run/stop.
- REV: pulse toggles reverse run/stop.
- CM: common.

The diagram uses NPN wiring. One pulse on SB1 starts forward operation; the next pulse stops the drive. One pulse on SB2 starts reverse; the next stops.

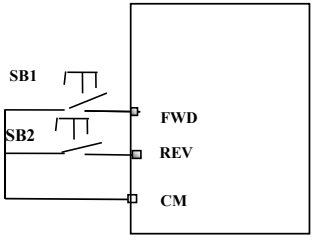

F209 Motor Stop Method	0: Deceleration stop. 1: Coast-to-stop.	Factory default: 0

- F209=0: output frequency decreases according to the selected deceleration time and stops at 0 Hz.
- F209=1: output is blocked immediately and the motor coasts according to mechanical inertia.

F210 Frequency Adjustment Step (Hz)	Setting range: 0.01– 10.00	Factory default: 0.01

During keypad digital adjustment while running or while the RUN indicator flashes, each press of ▲/▼ changes frequency by F210. Example: F210=0.5 changes frequency by 0.5 Hz per press. With a digital frequency source, UP/DOWN terminals can adjust frequency in any drive state, using the same step resolution.

F211 Digital Adjustment Rate	Setting range: 0.01– 100.0	Factory default: 5.00

Determines the rate at which the target changes while an UP/DOWN terminal is held. To match the UP/DOWN adjustment time to the programmed acceleration time, use:

F211 = 50 Hz / F114. Example: F114=5.0 s gives F211=10 Hz/s.

F212 Direction Memory	0: Disabled; 1: Enabled	Factory default: 0

Effective only in three-wire mode 1, F208=3.

- F212=0: direction is not retained after stop, fault reset, or power cycling.
- F212=1: if a run signal is present after stop, reset, or power-up but no new direction pulse is given, the drive runs in the memorized direction.

F213 Automatic Restart After Power Recovery	0: Disabled; 1: Enabled	Factory default: 0
F214 Automatic Restart After Fault Reset	0: Disabled; 1: Enabled	Factory default: 0

With F213=1, after power returns the drive waits F215 and then resumes the operating mode that existed before power loss. If F220=0, it restarts at F113. With F213=0, a new run command is required.

With F214=1, the drive automatically resets after delay F217 and restarts after delay F215. If F220=1, it resumes the pre-fault frequency; otherwise it uses F113. Automatic restart occurs only when the fault happened during running. A fault occurring while stopped is automatically reset but does not start the drive. With F214=0, manual reset is required.

F215 Automatic-Restart Delay (s)	Setting range: 0.1– 3000	Factory default: 60.0

F215 sets a delay time for F213 to restart and F214 to reset the fault and start automatically, ranging from 0.1S to 3000.0S.

F216 Maximum Repeated Fault Restarts	Setting range: 0– 5	Factory default: 0
F217 Fault-Reset Delay (s)	Setting range: 0.0– 10.0	Factory default: 3.0
F219 Communication Write to EEPROM	0: Allowed; 1: Prohibited	Factory default: 1

F216 sets the maximum number of actions for fault self starting. If the value set by this function code is exceeded, the frequency converter will not automatically reset or start after a fault occurs. After the fault disappears, manual reset is required, and the frequency converter needs to be given operating instructions before it can operate;
F217 sets the reset delay time after a fault, which limits the time interval between the fault and the reset.
F219 factory restoration is non recoverable.

F220 Frequency Memory	0: Disabled; 1: Enabled	Factory default: 0

Determines whether F213/F214 restart using the pre-interruption frequency. It applies to digital main and auxiliary references. Because the digital auxiliary reference includes polarity, its memorized magnitude and direction are stored in F155 and F156.

Table 5-1 Permitted Main/Auxiliary Reference Combinations

F204 / F203	Digital stored	AI1	AI2	Pulse	Multi-step	PID	AI3
0 Digital stored	○	●	●	●	●	●	○
1 AI1	●	○	●	●	●	●	○
2 AI2	●	●	○	●	●	●	○
3 Pulse	●	●	●	○	●	●	●
4 Multi-step	●	●	●	●	○	●	●
5 Digital non-stored	○	●	●	●	●	●	○
6 AI3	●	●	●	●	●	●	○
9 PID	●	●	●	●	●	○	○
10 Modbus	●	●	●	●	●	●	●

●：combination permitted；○：not permitted

Automatic-cycle speed control cannot be combined. If a selected combination includes automatic cycle, only the main reference operates.

F222 Count Memory	0: Disabled; 1: Enabled	Factory default: 0

With F222=1, the current count is retained when power is removed.

F224 Action When Target Is Below Lower Frequency	0: Stop. 1: Run at lower frequency.	Factory default: 0

F226 Skip-Frequency Processing Mode	0: Disabled during acceleration and deceleration; active only at steady speed. 1: Disabled during deceleration; active during acceleration and steady speed. 2: Active throughout acceleration, deceleration, and steady speed.	Factory default: 0

See F127– F130. When skip frequency is active during deceleration, do not set an excessively wide skip band.

5. 3 MULTIFUNCTION INPUT/OUTPUT TERMINALS

5.3.1、Multi-function Digital Outputs

F300 Relay Function	Setting range: 0– 40. See Table 5-2.	Factory default: 1
F301 DO1 Function		Factory default: 14
F302 DO2 Function		Factory default: 5

A700 drives rated 7.5 kW and below provide one multi-function digital output only and do not have DO2.

Table 5-2 Multi-function Output Assignments

Value	Function	Description
0	No function	Output has no assigned function.
1	Drive fault	ON when a drive fault occurs.
2	Above characteristic frequency 1	See F307– F309
3	Above characteristic frequency 2	See F307– F309
4	Coast-to-stop state	After a stop command and any programmed delay, ON when the drive has stopped. OFF when the coast-to-stop input is released.
5	Drive running 1	ON while the drive is running.
6	DC braking active	ON during DC injection braking. Availability depends on model; this indication is not provided on models rated 30 kW and above.
7	Accel/decel time switching	ON while an acceleration/deceleration-time switch is active.
8	Preset count reached	ON when the external count reaches F314.
9	Specified count reached	ON when the external count reaches F315.
10	Drive-overload pre-alarm	ON after the drive-overload timer exceeds overload time T×F704. It turns OFF when overload is removed or the overload trip occurs.
11	Motor-overload pre-alarm	ON after the motor-overload timer exceeds overload time T×F705. It turns OFF when overload is removed or the overload trip occurs.
12	Stall condition	ON when acceleration or deceleration is suspended by stall prevention.
13	Ready to run	ON when main and control power are established, no protection is active, and the drive is ready.
14	Drive running 2	ON while running; 0 Hz operation is also treated as running.
15	Frequency reached	ON when output frequency reaches the target within the F312 threshold.

16	Overhear pre-alarm	ON when measured temperature reaches 80% of the F745 trip setting. OFF after a trip or after temperature falls below the 80% threshold.
17	Above characteristic current	ON when output current reaches F310; see F310/F311
18	Analog-input wire-break protection	ON when an analog input wire-break condition is detected; see F741.
19	Underload 1 pre-alarm	ON halfway between the start of the underload timer and the trip. May also be used as dry-run protection in water-supply systems; see FA26/FA27.
20	Zero-current detection	ON when output current falls to the F754 zero-current level and remains there for F755.
21	Host writes DO1	Write 1 = ON; Write 0 = OFF
22	Host writes DO2	
23	Host writes relay TA/TC	
24	Watchdog indication	ON when Err6 watchdog protection occurs.
28	Sleep	ON when the drive enters sleep. This is not a fault, so the fault relay does not operate.
30	Mains-frequency pump running	ON when a mains-connected pump is operating.
31	VFD pump running	ON when a VFD-controlled pump is operating.
32	Pressure above upper limit	In PID negative-feedback operation, ON when feedback pressure exceeds upper limit FA03.
33～40	Reserved	

F303 DO1 Output Mode	0: Switching-level output. 1: Pulse output.	Factory default: 0

With level output, F301 assigns a function from Table 5-2. With pulse output, DO1 can generate up to 100 kHz; see F449– F453.

F304 S-Curve Initial-Segment Ratio (%)	Setting range: 2.0 – 50.0	Factory default: 30.0
F305 S-Curve Final-Segment Ratio (%)	Setting range: 2.0 – 50.0	Factory default: 30.0
F306 Acceleration/ Deceleration Profile	0: Linear. 1: S-curve.	Factory default: 0.

F304 and F305 are percentages of the total time from the current frequency to the target frequency.

Figure 5-6 S-Curve Acceleration/Deceleration

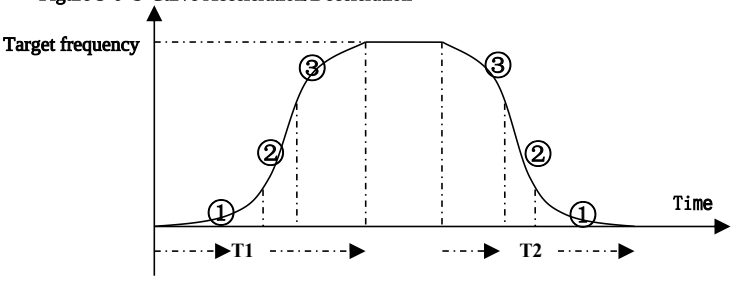

T1: acceleration time from current frequency to target frequency.
T2: deceleration time from current frequency to target frequency.

During acceleration, Stage 1 has increasing slope, Stage 2 constant slope, and Stage 3 decreasing slope. Deceleration is symmetrical.

F307 Characteristic Frequency 1 (Hz)	Setting range: F112– F111	Factory default: 10.00
F308 Characteristic Frequency 2 (Hz)		Factory default: 50.00
F309 Characteristic-Frequency Hysteresis (%)	Setting range: 0– 100	Factory default: 50

When F300 or F301 is set to 2 or 3, F307/F308 set the characteristic threshold and F309 the release hysteresis.
Example: F301=2, F307=10, F309=10. DO1 turns ON at ⩾10 Hz and turns OFF below 10−10×10%=9 Hz.

F310 Characteristic Current (A)	Setting range: 0– 5000.0	Factory default: rated current
F311 Characteristic-Current Hysteresis (%)	Setting range: 0– 100	Factory default: 10

When F300 or F301=17, these parameters set the current threshold and release hysteresis.
Example: F310=100 A and F311=10%; output turns ON at ⩾100 A and OFF below 90 A.

F312 Frequency-Reached Threshold (Hz)	Setting range: 0.00– 5.00	Factory default: 0.00

When F300/F301=15, the output turns ON when frequency enters the target band.
Example: target 20 Hz and F312=2 causes ON at 18 Hz while approaching 20 Hz.

F313 Count Divider	Setting range: 1– 65000	Factory default: 1
F314 Preset Count	Setting range: F315– 65000	Factory default: 1000
F315 Specified Count	Setting range: 1– F314	Factory default: 500

$$\text{Count Divider} = \frac{\text{Actual Input Pulses}}{\text{Drive Count Increments}}$$

Example: with F313=3, the drive increments its counter once for every three external pulses.

Preset Count

The output assigned " Preset Count Reached" produces a pulse of one count-width when pulses received at DI1 reach F314. The counter then restarts. Example: F313=1, F314=8, and F301=8; DO1 indicates when the eighth DI1 pulse arrives.

Specified Count

The output assigned " Specified Count Reached" turns ON when DI1 pulses reach F315 and remains ON until the count reaches F314. Example: F313=1, F314=8, F315=5, and F300=9; the relay turns ON at pulse 5 and remains ON through pulse 8.

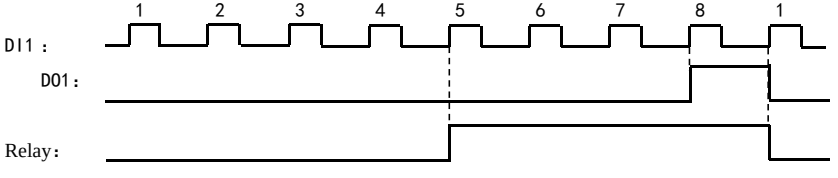

Figure 5-7 Preset and Specified Count Timing

5. 3. 2、Multi-function Digital Inputs

	Available Settings	
F316 DI1 Function	0 No function 1 Run	factory default 11
F317 DI2 Function	2 Stop	factory default 9
F318 DI3 Function	3 Multi-step speed 1 4 Multi-step speed 2	factory default 15
F319 DI4 Function	5 Multi-step speed 3 6 Multi-step speed 4	factory default 16
F320 DI5 Function	7 Fault reset 8 Coast to stop 9 External emergency stop 10 Acceleration/deceleration inhibit 11 Forward jog 12 Reverse jog 13 UP frequency increase 14 DOWN frequency decrease 15 FWD forward run 16 REV reverse run 17 Three-wire X enable 18 Accel/decel time switch 1 19 Reserved 20 Reserved 21 Frequency-source switch 22 Count input 23 Count reset 30 No-water / dry-run signal 31 Water-present signal 32 Fire-fighting pressure switch 33 Emergency fire-fighting control	factory default 7
F321 DI6 Function	34 Accel/decel time switch 2	factory default 8
F322 DI7 Function	37 Normally-open thermal protection 38 Normally-closed thermal protection	factory default 1
F323 DI8 Function	53 Watchdog 54 Frequency reset61 Start/stop terminal	factory default 2

Coast to stop and external emergency stop have the highest input priority.

Table 5-3 Input Functions

setting	Function	Explanation
0	No function	input is ignored; use for unused terminals to prevent unintended action.
1	Run	when terminal commands are enabled, equivalent to the keypad RUN key.
2	Stop	when terminal commands are enabled, equivalent to STOP/RESET.
3	Multi-step selections 1	digital combinations provide up to 15 step speeds; see Table 5-5.
4	Multi-step selections 2	

5	Multi-step selections 3	
6	Multi-step selections 4	
7	Fault reset	Same reset function as STOP/RESET; permits remote reset.
8	Coast to stop	Immediately blocks drive output; motor stopping is uncontrolled and determined by inertia. Common for high-inertia loads where stopping time is not critical. Same meaning as F209 coast-to-stop.
9	External emergency stop	A normally-open external fault signal causes a fault indication and stop.
10	Accel/decel inhibit	Holds the current output frequency against external changes, except for stop commands.
11	Forward jog	Forward jog using F124, F125, and F126.
12	Reverse jog	Reverse jog using F124, F125, and F126.
13	UP	In digital-reference operation, increases frequency at the rate set by F211.
14	DOWN	In digital-reference operation, decreases frequency at the rate set by F211.
15	FWD	Controls forward run when start/stop source is terminals or a terminal combination.
16	REV	Controls reverse run when start/stop source is terminals or a terminal combination.
17	Three-wire X enable	Used with FWD, REV, and CM for three-wire control; see F208.
18	Accel/decel time switch 1	When active, selects the second ramp set F116/F117.
21	Frequency-source switch	With F207=2, switches between X and Y. With F207=3, switches between X and X+Y.
22	Count input	Pulse input for the built-in counter. When DI1 is used for pulse frequency reference or PID pulse setpoint, assign F316=22 as required by the application.
23	Count reset	Clears the terminal counter
30	No-water signal	With PID control and FA26=1, an active input enters dry-run protection.
31	Water-present signal	With PID control and FA26=1, an active input clears dry-run protection.
32	Fire-fighting pressure switch	During PID control, switches the PID setpoint to fire-fighting pressure FA58.

33	Emergency fire-fighting control	When emergency fire mode FA59 is enabled, this input enters emergency fire-fighting mode.
34	Accel/decel time switch 2	Used with input 18; see Table 5-4.
37	Normally-open thermal protection	Connect an external NO thermal relay. If the contact closes while running , the drive trips OH1.
38	Normally-closed thermal protection	Connect an external NC thermal relay. If the contact opens while running , the drive trips OH1.
53	Watchdog	Within time F326, the signal must transition from low to high. Otherwise Err6 occurs and stopping follows F327.
54	Frequency reset	Resets the current target frequency to F113.
61	Start/stop terminal	Inactive = stop; active = start. With F209=0, assigning terminal start/stop does not disable keypad start/stop. Operation remains subject to F200/F201.

Table 5-4 Acceleration/Deceleration Time Selection

Switch 2, function 34	Switch 1, function 18	Selected Ramp	Parameters
0	0	First	F114、F115
0	1	Second	F116、F117
1	0	Third	F277、F278
1	1	Fourth	F279、F280

Table 5-5 Multi-Step Speed Combinations

K4	K3	K2	K1	Step	Related Parameters
0	0	0	0	None	None
0	0	0	1	Step 1	F504/F519/F534/F549/F557/F565
0	0	1	0	Step 2	F505/F520/F535/F550/F558/F566
0	0	1	1	Step 3	F506/F521/F536/F551/F559/F567
0	1	0	0	Step 4	F507/F522/F537/F552/F560/F568
0	1	0	1	Step 5	F508/F523/F538/F553/F561/F569
0	1	1	0	Step 6	F509/F524/F539/F554/F562/F570
0	1	1	1	Step 7	F510/F525/F540/F555/F563/F571
1	0	0	0	Step 8	F511/F526/F541/F556/F564/F572
1	0	0	1	Step 9	F512/F527/F542/F573
1	0	1	0	Step 10	F513/F528/F543/F574
1	0	1	1	Step 11	F514/F529/F544/F575

1	1	0	0	Step 12	F515/F530/F545/F576
1	1	0	1	Step 13	F516/F531/F546/F577
1	1	1	0	Step 14	F517/F532/F547/F578
1	1	1	1	Step 15	F518/F533/F548/F579

K1– K4 are multi-function inputs assigned Multi-Step 1– 4. In the table, 0=OFF and 1=ON.

F324 Coast-to-Stop Input Logic	0: Positive logic. 1: Negative logic.	Factory default: 0
F325 External Emergency-Stop Input Logic		Factory default: 0
F326 Watchdog Time (s)	0.0: Watchdog disabled. 0.1– 3000.	Factory default: 10.0
F327 Watchdog Stop Selection	0: Immediate stop. 1: Deceleration stop.	Factory default: 0
F328 Terminal Filter Count	Setting range: 1– 100	Factory default: 20

With positive logic, NPN inputs are active low and PNP inputs active high, the same as other inputs. With negative logic, NPN inputs are active high and PNP inputs active low, opposite to other inputs.

During running, a rising edge must occur within F326. With F327=0, absence of an edge immediately blocks output and produces Err6. With F327=1, the drive decelerates to a stop and then displays Err6. The watchdog output indication becomes active.

F330 Digital-Input Status Display		read-only

Select F330 and press SET to display DI status. Figure 5-8 uses the upper and lower segments of four digits to show inactive/active states for DI1– DI8.

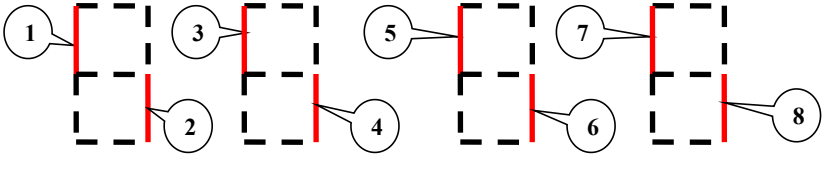

Figure 5-8 Schematic diagram of DI terminal status

Figure 5-8 Interpretation

A solid segment is illuminated. The example shows DI1 inactive, DI2 active, DI3 inactive, DI4 active, DI5 inactive, DI6 active, DI7 inactive, and DI8 active.

Analog-Input Monitors —values displayed as 0– 4095

F331 Monitor AI1		read-only
F332 Monitor AI2		read-only
F333 Monitor AI3		read-only

Output-Terminal Diagnostics

F335 Relay Output Test	0: Output inactive; 1: output active.	Factory default: 0
F336 DO1 Output Test		Factory default: 0
F337 DO2 Output Test		Factory default: 0

While the drive is stopped normally and the function-code value is displayed, use ▲/▼ to test the outputs. ▲ activates and holds the output; ▼ deactivates and holds it. Pressing the save/SET key during the test stores the displayed value. On leaving the parameter-value display, the terminal returns to its normal assigned state.

F338 AO1 Output Test	Setting range: 0－4095	Factory default: 0
F339 AO2 Output Test	Setting range: 0－4095	Factory default: 0

While stopped, use ▲ to increase and ▼ to decrease analog output. The value remains when the key is released. Press SET to store the current test value. On leaving the parameter-value display, normal output operation resumes.

F340 DI Negative-Logic Selection	Bit values: 0 Disabled; 1 DI1; 2 DI2; 4 DI3; 8 DI4; 16 DI5; 32 DI6; 64 DI7; 128 DI8.	Factory default: 0

Add bit values for multiple terminals. Examples: DI1 negative logic =1; DI2=2; DI1 and DI4=1+8=9.

F343 DI1 ON Delay (s)	0.00～99.99	Factory default: 0
F344 DI2 ON Delay (s)	0.00～99.99	Factory default: 0

F345 DI3 ON Delay (s)	0.00～99.99	Factory default: 0
F346 DI4 ON Delay (s)	0.00～99.99	Factory default: 0
F347 DI5 ON Delay (s)	0.00～99.99	Factory default: 0
F348 DI6 ON Delay (s)	0.00～99.99	Factory default: 0

F343– F348 delay recognition of an ON transition on DI1– DI6. If the input turns OFF before the delay expires, it is treated as having remained OFF.

F351 DI1 OFF Delay (s)	0.00～99.99	Factory default: 0
F352 DI2 OFF Delay (s)	0.00～99.99	Factory default: 0
F353 DI3 OFF Delay (s)	0.00～99.99	Factory default: 0
F354 DI4 OFF Delay (s)	0.00～99.99	Factory default: 0
F355 DI5 OFF Delay (s)	0.00～99.99	Factory default: 0
F356 DI6 OFF Delay (s)	0.00～99.99	Factory default: 0

F351– F356 delay recognition of an OFF transition. If the input turns ON again before the delay expires, it is treated as having remained ON.

F359 Stop-Command Priority	0: Disabled; 1: Enabled.	Factory default: 0

With F359=1, if a stop command is given while a maintained run signal remains active —Run, Start/Stop, FWD, REV, or three-wire X —the stop command has priority. To restart, first remove the run signal and then apply it again.

F360 DO Negative-Logic Selection	0: Disabled. 1: DO1 negative logic. 2: DO2 negative logic. 4: Relay 1 negative logic.	Factory default: 0

Add bit values for multiple outputs. Example: DO1+DO2 negative logic =1+2=3.

5.4 ANALOG AND PULSE INPUTS/OUTPUTS

The A700 provides two analog inputs and two analog outputs.

F400 AI1 Input Lower Limit (V)	0.00～F402	Factory default: 0.04
F401 AI1 Setting at Lower Limit	0.00～F403	Factory default: 1.00
F402 AI1 Input Upper Limit (V)	F400～10.00	Factory default: 10.00
F403 AI1 Setting at Upper Limit	Max（1.00，F401）～2.00	Factory default: 2.00
F404 AI1 Proportional Gain K1	0.0～10.0	Factory default: 1.0
F405 AI1 Filter Time Constant (s)	0.10～10.00	Factory default: 0.10

These parameters scale the analog input to the required frequency reference.

• F400/F402 define the accepted input limits. Example: F400=1 V and F402=8 V on a 0– 10 V channel causes inputs below 1 V to be treated as zero and inputs above 8 V as full scale. With F111=50 Hz, 1– 8 V corresponds to 0– 50 Hz.

• F405: a larger filter constant improves stability but slows response and may reduce effective accuracy.

• F404: channel gain. If 1 V originally corresponds to 10 Hz, F404=2 doubles it to 20 Hz.

• F401/F403 define the signed setting at the lower and upper input limits. With F111=50 Hz, F401=0 and F403=2 map 0– 10 V to −50 to +50 Hz: 0 V = −50 Hz, 5 V = 0 Hz, 10 V = +50 Hz. Values above 1 represent positive output and values below 1 negative output. If F202 commands forward, the negative-frequency portion commands reverse, and vice versa.

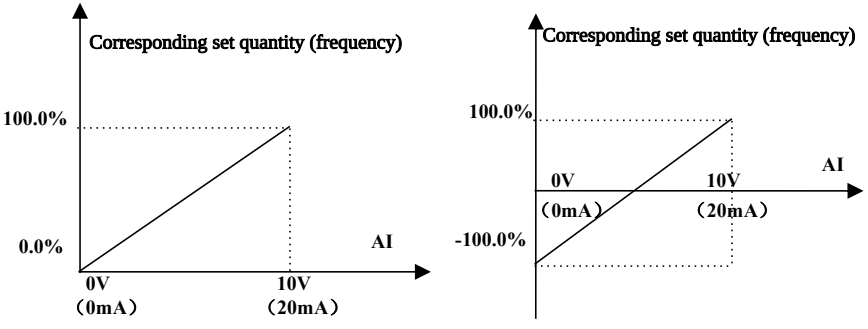

Figure 5-9 shows linear mappings from 0– 10 V or 0– 20 mA to 0– 100%, and bipolar scaling from −100% to +100%.

Scaling Convention
F401 and F403 are percentage-based encoded values: greater than 1.00 is positive; less than 1.00 is negative.
Example: F401=0.5 represents −50%.
Scaling reference:
• In combined-frequency operation, when the analog input is auxiliary Y and F205=1, the reference base is main frequency X.
• In all other cases, the base is upper frequency F111.

Calculation shown in Figure 5-10:
A = (F401−1) × reference base
B = (F403−1) × reference base
C = F400
D = F402

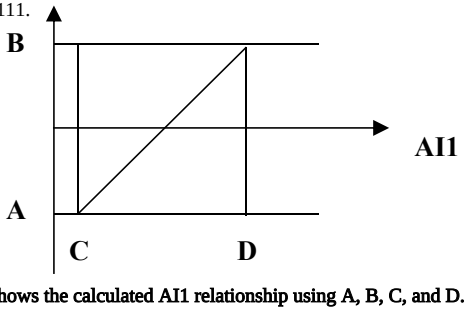

Figure 5-10 shows the calculated AI1 relationship using A, B, C, and D.

F406 AI2 Input Lower Limit (V)	0.00～F408	Factory default:0.04
F407 AI2 Setting at Lower Limit	0.00～F409	Factory default:1.00
F408 AI2 Input Upper Limit (V)	F406～10.00	Factory default:10.00
F409 AI2 Setting at Upper Limit	Max (1.00, F407) ～2.00	Factory default:2.00
F410 AI2 Proportional Gain K2	0.0～10.0	Factory default:1.0

F411 AI2 Filter Time Constant (s)	Range: 0.1– 10.00	Factory default:0. 1
F412 AI3 Input Lower Limit (V)	Range: 0.00～F414	Factory default:0. 05
F413 AI3 Setting at Lower Limit	Range: 0～F415	Factory default:1. 00
F414 AI3 Input Upper Limit (V)	Range: F412～10.00V	Factory default:10. 00
F415 AI3 Setting at Upper Limit	Range: Max（1.00，F413）～2.00	Factory default:2. 00
F416 AI3 Proportional Gain K3	Range: 0.0～10.0	Factory default:1. 0
F417 AI3 Filter Time Constant (s)	Range: 0.01～10.00	Factory default: 0. 10

F406, F408, F412, and F414 are not changed by factory restoration.

AI2 is configured in the same way as AI1.

F418 AI1 0-Hz Voltage Dead-zone (V)	Range: 0.00～1.00	Factory default: 0. 00
F419 AI2 0-Hz Voltage Dead-zone (V)	Range: 0.00～1.00	Factory default: 0. 00
F420 AI3 0-Hz Voltage Dead-zone (V)	Range: 0～0.50（ in both directions）	Factory default: 0. 00

0-Hz Dead-zone Example

If 0– 5 V is scaled to −50 to +50 Hz, 2.5 V corresponds to 0 Hz. With F418 or F419=0.5 V, the range 2.0–3.0 V is treated as 0 Hz. In general, 2.5±N corresponds to 0 Hz. This function is effective when the lower-limit setting is below 1.

F421 Keypad Display Selection	The source table lists: 1: Automatic local/remote switching. 2: Both local and remote display.	Factory default: 1
F422 Potentiometer Source	0: Local-keypad potentiometer. 1: Remote-keypad potentiometer.	Factory default: 0

The explanatory text also refers to setting 0 for local keypad and 1 for remote/automatic switching. For models rated 30 kW and below, connecting the remote keypad disables the local keypad to reduce power consumption; disconnecting the remote keypad automatically re-enables the local keypad.

F421/F422 are not reset by factory restoration. The remote keypad uses an 8-core modular cable.

If F421 selects remote operation but F422=0, the remote potentiometer is not active.

The A700 provides analog outputs AO1 and AO2.

F423 AO1 Output Range	0: 0– 5 V. 1: 0– 10 V or 0– 20 mA. 2: 4– 20 mA.	Factory default: 1
F424 AO1 Minimum-Output Corresponding Frequency (Hz)	Range: 0.0– F425	Factory default: 0. 05
F425 AO1 Maximum-Output Corresponding Frequency (Hz)	Range: F424～F111	Factory default: 50. 00
F426 AO1 Output Compensation (%)	Range: 0～120	Factory default: 100

For current output, set control-board selector J5 to " I" .

F424/F425 linearly map the output range to the represented frequency range.

Example: F423=0, F424=10, F425=120 means AO1 outputs 0– 5 V for 10– 120 Hz.

F426 corrects analog-output offset or scaling error.

F427 AO2 Output Range	0: 0– 20 mA. 1: 4– 20 mA.	Factory default: 0
F428 AO2 Minimum Corresponding Frequency (Hz)	Range: 0.0– F429	Factory default: 0. 05
F429 AO2 Maximum Corresponding Frequency (Hz)	Range: F428～F111	Factory default: 50. 00
F430 AO2 Output Compensation (%)	Range: 0～120%	Factory default: 100

AO2 is configured like AO1 but outputs current only.

F431 A01 Represented Signal	0: Operating frequency. 1: Output current. 2: Output voltage. 3: Analog input AI1. 4: Analog input AI2. 5: Reserved. 6: Reserved. 7: Host-controller command. 8: Target frequency.	Factory default: 0
F432 A02 Represented Signal		Factory default: 1

When representing output current, full-scale output corresponds to 2× rated current.

When representing output voltage, full scale corresponds to rated output voltage.

F433 Full-Scale Current for External Voltage-Type Ammeter	Range: 0.01– 5.00 × rated current.	Factory default: 2. 00
F434 Full-Scale Current for External Current Meter		Factory default:2. 00

Example: external meter range 20 A and drive rated current 8 A gives F433=20/8=2.50.

F437 Analog Filter Width	Range: 1– 100	Factory default: 10

Larger values stabilize analog detection but slow response.

F438 AI1 Input Type	0: Voltage. 1: Current.	Factory default: 0
F439 AI2 Input Type	0: Voltage. 1: Current.	Factory default: 1

Applicable to 4T models rated 37 kW and above.

F440 FI Minimum Input Pulse Frequency (kHz)	Range: 0.00～F442	Factory default: 0. 00
F441 Setting at FI Minimum Frequency	Range: 0.00～F443	Factory default: 1. 00
F442 FI Maximum Input Pulse Frequency (kHz)	Range: F440～100.00	Factory default: 10. 00

F443 Setting at FI Maximum Frequency	Range: Max(1.00, F441)– 2.00.	Factory default: 2. 00
F445 FI Pulse-Input Filter Constant	Range: 0– 1000	Factory default: 0
F446 FI 0-Hz Frequency Dead-zone (kHz)	Range: 0– F442 in both directions	Factory default: 0. 00
F448 FI Proportional Gain	Range: 0.001– 2.000	Factory default: 1. 000

Pulse-reference scaling is analogous to analog-input scaling.

- F440/F442 define minimum and maximum input pulse frequency.

Example: F440=0 kHz, F442=10 kHz, and F111=50 Hz map 0– 10 kHz to 0– 50 Hz.

- F445 filters the pulse measurement. Larger values improve stability but reduce response and effective accuracy.
- F441/F443 define signed output at the minimum/maximum input. With F111=50 Hz, F441=0 and F443=2 map 0– 10 kHz to −50 to +50 Hz: 0 kHz=−50 Hz, 5 kHz=0 Hz, 10 kHz=+50 Hz. Values above 1 are positive and values below 1 negative. Direction follows the same rule as analog scaling and F202.
- F446 defines a Dead-zone around the 0-Hz pulse frequency. With the above bipolar mapping and F446=0.5 kHz, 4.5– 5.5 kHz produces 0 Hz. In general, 5±N kHz produces 0 Hz. Effective when the minimum-frequency corresponding setting is below 1.

5

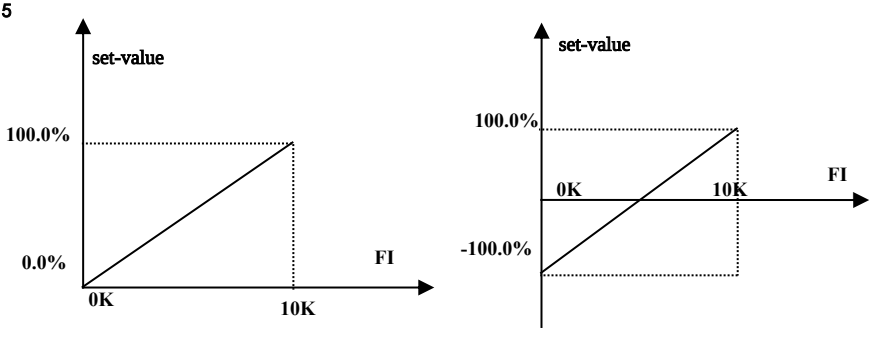

Figure 5-11 shows pulse input vs. set-value correspondence FI mapping.

Pulse Scaling Convention

F441/F443 are encoded percentage values: >1.00 positive; <1.00 negative. Example: F441=0.5 means −50%.

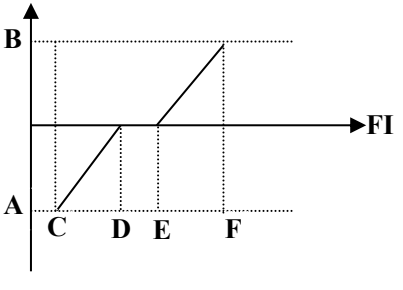

Figure 5-12 shows pulse input vs. Set-value calculation

Scaling reference:

- If FI is auxiliary Y in combined operation and F205=1, the base is main frequency X.
- Otherwise, the base is upper frequency F111.

Figure 5-12 calculation:

A = (F441−1) × reference base

B = (F443−1) × reference base

C = F440

F = F442

(E−D)/2 = F446

F448 FI proportional gain: if 1 kHz originally corresponds to 5 Hz, F448=2.000 changes it to 10 Hz.

F449 FO Maximum Output Pulse Frequency (kHz)	Range: 0.00～100.00	Factory default: 10. 00
F450 FO Pulse-Frequency Offset (%)	Range: 0.0～100.0	Factory default: 0. 0
F451 FO Pulse-Frequency Gain	Range: 0.00～10.00	Factory default: 1. 00

F453 FO Output-Pulse Signal Selection	0: Operating frequency. 1: Output current. 2: Output voltage. 3: Analog input AI1. 4: Analog input AI2. 5: Input pulse frequency. 6: Output torque. 7: Host-controller command. 8: Target frequency.	Factory default: 0

When DO1 is configured as a high-speed pulse output, F449 sets its maximum frequency.

If offset is b, gain is K, standard output is x, and actual output is Y, then:Y = Kx + b.

F450=100% corresponds to the maximum pulse frequency F449.

F451 compensates output error.

When representing current, full scale corresponds to 2× rated current;

when representing voltage, full scale corresponds to 1.0× rated output voltage.

F460 AI1 Input Characteristic	0: Linear. 1: Piecewise linear.	Factory default: 0
F461 AI2 Input Characteristic	0: Linear. 1: Piecewise linear.	Factory default: 0
F462 A1 Voltage (V)	F400～F464	Factory default: 2.00
F463 A1 Corresponding Setting	F401～F465	Factory default: 1.20
F464 A2 Voltage (V)	F462～F466	Factory default: 5.00
F465 A2 Corresponding Setting	F463～F467	Factory default: 1.50
F466 A3 Voltage (V)	F464～F402	Factory default: 8.00
F467 A3 Corresponding Setting	F465～F403	Factory default: 1.80
F468 B1 Voltage (V)	F406～F470	Factory default: 2.00
F469 B1 Corresponding Setting	F407～F471	Factory default: 1.20

F470 B2 Voltage (V)	F468～F472	Factory default: 5.00
F471 B2 Corresponding Setting	F469～F473	Factory default: 1.50
F472 B3 Voltage (V)	F470～F408	Factory default: 8.00
F473 B3 Corresponding Setting	F471～F409	Factory default:1.80

With linear input selected, scaling follows the basic analog parameters. With piecewise-linear input, three insertion points A1/A2/A3 or B1/B2/B3 are added, each assigning a frequency to an input voltage.

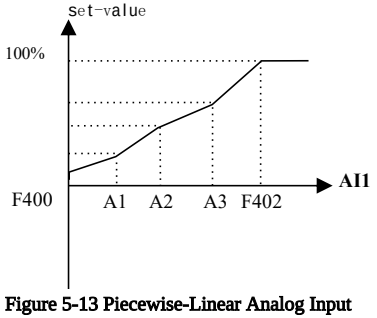

Figure 5-13 Piecewise-Linear Analog Input

Example for AI1: F460=1, F462=2.00 V, F463=1.4, F111=50, F203=1, F207=0. Point A1 corresponds to (F463−1)×F111 = 20 Hz, so 2.00 V commands 20 Hz. Configure other points in the same manner. AI2 is set identically with B1– B3.

5. 5 MULTI-STEP SPEED CONTROL

Multi-step control functions as a simple built-in programmable controller for automatic speed-sequence logic. Operating time, direction, and frequency can be set for different processes.

The drive supports 15 externally selected speeds and automatic cycling through up to eight speeds. Multi-step control is disabled during speed search and becomes effective afterward using the programmed ramps.

F500 Multi-Step Type	0: Three-step speed. 1: Fifteen-step speed. 2: Automatic cycle of up to eight speeds.	Factory default: 1
F580 Step-Selection Mode	0: Mode 1 —0000 invalid; 0001=Step 1, then sequentially upward. 1: Mode 2 —0000=Step 1; 0001=Step 2, then sequentially upward; 1111 invalid.	Factory default: 0

When F203=4, use F500 to select the multi-step type.

For F500=2, F501 selects whether 2, 3, …, or 8 speeds are included in the automatic cycle.

Table 5-6 Operating Modes

F203	F500	Operation mode	Explanation
4	0	Three-step speed	Priority is Step 1, then 2, then 3. Can be combined with analog reference. With F207=4, step speed has priority over analog.
4	1	Fifteen-step speed	Can be combined with analog reference. With F207=4, step speed has priority.
4	2	Automatic cycle, up to eight speeds	Manual frequency adjustment is prohibited. Configure 2-speed through 8-speed automatic cycling by parameter.

F501 Number of Speeds in Automatic Cycle	Range: 2– 8	Factory default: 7

F502 Number of Automatic Cycles	Range: 0– 9999; 0 = continuous cycling.	Factory default: 0
F503 Action After Final Cycle	0: Stop. 1: Continue at the last step speed.	Factory default: 0

When automatic cycling is selected by F203=4 and F500=2, use F501– F503:

- F501 selects 2– 8 speeds; default 7.
- F502 sets the number of complete cycles. With F502=0, cycling continues until a stop command. With F502>0, the sequence ends after the programmed number of complete cycles. If stopped before completion, a subsequent run command starts a new series of F502 cycles.
- F503 selects whether the drive stops or continues at the final step after the cycle count is reached.

Example:

F501=3, F502=100, F503=1. The drive cycles through Steps 1, 2, and 3 one hundred times, then continues running at Step 3.

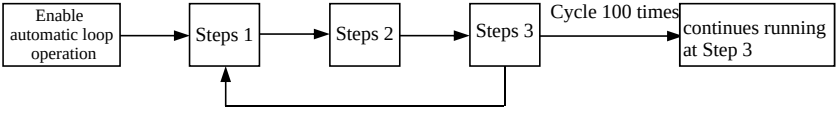

Figure 5-14 Automatic-Cycle Sequence.

Press STOP or apply a terminal stop signal at any time to terminate automatic cycling.

F504 Step 1 Step-Frequency Settings (Hz)	F112～F111	Factory default: 5.00
F505 Step 2 Step-Frequency Settings (Hz)	F112～F111	Factory default: 10.00
F506 Step 3 Step-Frequency Settings (Hz)	F112～F111	Factory default: 15.00
F507 Step 4 Step-Frequency Settings (Hz)	F112～F111	Factory default: 20.00
F508 Step 5 Step-Frequency Settings (Hz)	F112～F111	Factory default: 25.00
F509 Step 6 Step-Frequency Settings (Hz)	F112～F111	Factory default: 30.00
F510 Step 7 Step-Frequency Settings (Hz)	F112～F111	Factory default: 35.00
F511 Step 8 Step-Frequency Settings (Hz)	F112～F111	Factory default: 40.00
F512 Step 9 Step-Frequency Settings (Hz)	F112～F111	Factory default: 5.00
F513 Step 10 Step-Frequency Settings (Hz)	F112～F111	Factory default: 10.00
F514 Step 11 Step-Frequency Settings (Hz)	F112～F111	Factory default: 15.00
F515 Step 12 Step-Frequency Settings (Hz)	F112～F111	Factory default: 20.00
F516 Step 13 Step-Frequency Settings (Hz)	F112～F111	Factory default: 25.00
F517 Step 14 Step-Frequency Settings (Hz)	F112～F111	Factory default: 30.00
F518 Step 15 Step-Frequency Settings (Hz)	F112～F111	Factory default: 35.00
F519 Step 1 acceleration (S)	0.1～3000	factory default according to model
F520 Step 2 acceleration (S)	0.1～3000	
F521 Step 3 acceleration (S)	0.1～3000	
F522 Step 4 acceleration (S)	0.1～3000	
F523 Step 5 acceleration (S)	0.1～3000	
F524 Step 6 acceleration (S)	0.1～3000	
F525 Step 7 acceleration (S)	0.1～3000	
F526 Step 8 acceleration (S)	0.1～3000	
F527 Step 9 acceleration (S)	0.1～3000	
F528 Step 10 acceleration (S)	0.1～3000	
F529 Step 11 acceleration (S)	0.1～3000	
F530 Step 12 acceleration (S)	0.1～3000	
F531 Step 13 acceleration (S)	0.1～3000	

F532 Step 14 acceleration	range 0.1 - 3000 s	factory default according to model
F533 Step 15 acceleration	range 0.1 - 3000 s	
F534 Step 1 deceleration	range 0.1 - 3000 s	
F535 Step 2 deceleration	range 0.1 - 3000 s	
F536 Step 3 deceleration	range 0.1 - 3000 s	
F537 Step 4 deceleration	range 0.1 - 3000 s	
F538 Step 5 deceleration	range 0.1 - 3000 s	
F539 Step 6 deceleration	range 0.1 - 3000 s	
F540 Step 7 deceleration	range 0.1 - 3000 s	
F541 Step 8 deceleration	range 0.1 - 3000 s	
F542 Step 9 deceleration	range 0.1 - 3000 s	
F543 Step 10 deceleration	range 0.1 - 3000 s	
F544 Step 11 deceleration	range 0.1 - 3000 s	
F545 Step 12 deceleration	range 0.1 - 3000 s	
F546 Step 13 deceleration	range 0.1 - 3000 s	
F547 Step 14 deceleration	range 0.1 - 3000 s	
F548 Step 15 deceleration	range 0.1 - 3000 s	
F549 Step 1 Direction	0 forward, 1 reverse	Factory default: 0
F550 Step 2 Direction	0 forward, 1 reverse	Factory default: 0
F551 Step 3 Direction	0 forward, 1 reverse	Factory default: 0
F552 Step 4 Direction	0 forward, 1 reverse	Factory default: 0
F553 Step 5 Direction	0 forward, 1 reverse	Factory default: 0
F554 Step 6 Direction	0 forward, 1 reverse	Factory default: 0
F555 Step 7 Direction	0 forward, 1 reverse	Factory default: 0
F556 Step 8 Direction	0 forward, 1 reverse	Factory default: 0
F573 Step 9 Direction	0 forward, 1 reverse	Factory default: 0
F574 Step 10 Direction	0 forward, 1 reverse	Factory default: 0
F575 Step 11 Direction	0 forward, 1 reverse	Factory default: 0

F576 Step 12 Direction	0 forward, 1 reverse	Factory default: 0
F577 Step 13 Direction	0 forward, 1 reverse	Factory default: 0
F578 Step 14 Direction	0 forward, 1 reverse	Factory default: 0
F579 Step 15 Direction	0 forward, 1 reverse	Factory default: 0
F557 Step 1 run time	range 0.1 - 3000 s	Factory default: 1.0
F558 Step 2 run time	range 0.1 - 3000 s	Factory default: 1.0
F559 Step 3 run time	range 0.1 - 3000 s	Factory default: 1.0
F560 Step 4 run time	range 0.1 - 3000 s	Factory default: 1.0
F561 Step 5 run time	range 0.1 - 3000 s	Factory default: 1.0
F562 Step 6 run time	range 0.1 - 3000 s	Factory default: 1.0
F563 Step 7 run time	range 0.1 - 3000 s	Factory default: 1.0
F564 Step 8 run time	range 0.1 - 3000 s	Factory default: 1.0
F565 after Step 1 Stop/Pause Time After Each Automatic	range 0.0 - 3000 s	Factory default: 0.0
F566 after Step 2 Stop/Pause Time After Each Automatic	range 0.0 - 3000 s	Factory default: 0.0
F567 after Step 3 Stop/Pause Time After Each Automatic	range 0.0 - 3000 s	Factory default: 0.0
F568 after Step 4 Stop/Pause Time After Each Automatic	range 0.0 - 3000 s	Factory default: 0.0
F569 after Step 5 Stop/Pause Time After Each Automatic	range 0.0 - 3000 s	Factory default: 0.0
F570 after Step 6 Stop/Pause Time After Each Automatic	range 0.0 - 3000 s	Factory default: 0.0
F571 after Step 7 Stop/Pause Time After Each Automatic	range 0.0 - 3000 s	Factory default: 0.0
F572 after Step 8 Stop/Pause Time After Each Automatic	range 0.0 - 3000 s	Factory default: 0.0

5. 6 AUXILIARY FUNCTIONS

F600 DC Injection Braking Selection	0: Disabled. 1: Braking before start. 2: Braking during stop. 3: Braking both before start and during stop.	Factory default: 0
F601 DC-Braking Start Frequency (Hz)	Range: 0.20– 50.00	Factory default: 1.00
F602 Pre-Start DC-Braking Strength (%)	⩽30 kW: 0– 250. ⩾37 kW: 0– 200.	Factory default: 50
F603 Stop DC-Braking Strength (%)	⩽30 kW: 0– 250. ⩾37 kW: 0– 200.	Factory default: 100
F604 Pre-Start Braking Time (s)	Range: 0– 30.00	Factory default: 0.50
F605 Stop Braking Time (s)		

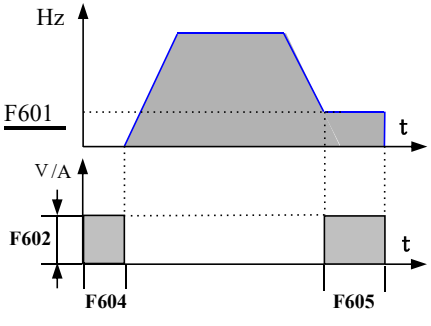

Figure 5-15 DC Braking

- F600=0: DC braking disabled.
- F600=1: after start conditions are met, DC braking is applied before acceleration from the starting frequency. This is useful when a fan or other load is slowly rotating or rotating backward before start; braking brings the motor to rest and reduces starting current shock. A stop command during pre-start braking causes a deceleration stop.
- F600=2: during a stop, when output frequency falls below F601, DC braking quickly stops the motor. A new start command cancels braking and starts the drive. A repeated stop command during stop braking is ignored.
- F600=3: both functions are active.
- Pre-start braking is disabled during speed search.

DC-Braking Parameter Meaning

- F601: frequency below which stop DC braking begins.
- F602/F603: braking strength. Higher values brake faster but increase motor heating.
- F604: pre-start braking duration.
- F605: stop-braking duration.

During DC braking, the stationary motor has no self-cooling airflow and can overheat. Do not set excessive braking voltage or time; add thermal protection where required.

F607 Stall-Prevention Control	0– 2: Reserved. 3: Voltage and current control. 4: Voltage control only. 5: Current control only.	Factory default: 3
F608 Overcurrent-Stall Threshold (%)	Range: 60– 200	Factory default: 160
F609 Overvoltage-Stall Threshold (%)	Range: 110– 200	Factory default: single-phase 130; three-phase 140

Threshold current = F608 × drive rated current.

If output current exceeds the threshold:

- during acceleration, acceleration is suspended;
- at constant speed, frequency is reduced;
- during deceleration, the rate of frequency decrease is reduced.

Normal frequency control resumes when current falls below the threshold.

Voltage control stabilizes the DC bus during rapid stopping or load regeneration by extending deceleration or adjusting output frequency. Disable voltage control when using a braking resistor/dynamic-braking unit, because it may alter actual deceleration time.

Current control prevents overcurrent during rapid acceleration or load steps by extending ramps or reducing output frequency. It is effective only in V/F control.

Cautions:

- Do not use voltage/current stall control for hoisting loads; disable it.
- Actual ramp times may differ from programmed values. Disable the function where precise ramp times are required.

F611 Dynamic-Braking Threshold (V)	Range: 200– 1000	Factory default: according to model
F612 Braking Duty Cycle (%)	Range: 0– 100	Factory default: 80

When DC-bus voltage exceeds F611, the braking unit turns ON and dissipates energy until bus voltage falls back to the threshold.
Higher duty cycle increases braking effect but also increases resistor heating.

F613 Speed-Search Enable	0: Disabled. 1: Enabled. 2: Enabled only for the first start after power-up or fault reset	Factory default: 0

Factory default: 0.

With F613=1, the drive estimates motor direction and speed, then starts at the corresponding frequency for smooth, low-impact pickup of a rotating motor. Applications include restart after momentary power interruption, restart after fault reset, restart after stopping due to loss of direction while a run command remains present, and restart after a run command is removed and reapplied. Jog operation does not use speed search. With F106=6, speed search is always disabled.

F614 Speed-Search Method	0: Search downward from the memorized stop frequency. 1: Search downward from maximum frequency. 2: Search from the memorized stop frequency with direction detection. 3: Search from upper frequency with direction detection.	Factory default: 1

F615 Speed-Search Rate	Range: 1– 100	Factory default: 20

Higher values search faster, but an excessive value may reduce reliability.

F618 Speed-Search Start Delay (s)	Range: 0.5– 60.0	Factory default: 1.5

Delay before search begins when speed search is enabled.

F622 Dynamic-Braking Mode	0: Fixed duty cycle. 1: Automatic duty cycle.	Factory default: 1

- Fixed: when bus voltage reaches F611, the braking module uses F612.
- Automatic: duty cycle increases automatically as bus voltage rises, improving braking but increasing resistor heating.

F631 VDC Regulation Enable	0: Disabled. 1: Enabled. 2, 3: Reserved.	Factory default: 0
F632 VDC Regulator Target Voltage (V)	Range: 200– 800	Factory default: according to model

With F631=1, the regulator controls short regenerative bus-voltage rise caused by load changes by adjusting output frequency or reducing braking torque. When bus voltage exceeds F632, it regulates toward F632. VDC regulation is always disabled when F106=6.

Note: Models rated 30 kW and above do not provide VDC regulation.

F638 Parameter-Copy Enable	0: Copy disabled. 1: Download 1 —voltage class and power rating must both match. 2: Download 2 —ignore voltage class and power rating.	Factory default: 1
F639 Parameter-Copy Code		Factory default: according to model

Drives with different copy codes cannot exchange parameter sets.

F640 Parameter-Copy Type	0: Copy all parameters. 1: Copy parameters except motor parameters F801– F810 and F844.	Factory default: 1

See the copy-module manual for operation.

name	illustrate	Remark
Er71 Copy timeout	No valid data received within 3 s.	This is a copy message rather than a normal drive fault.
Er72 Copy while running	Copy attempted while the drive was running.	
Er73 Password not unlocked	Password protection active and password not unlocked.	
Er74 Different model	Copy code, voltage class, or power rating does not satisfy the selected copy mode.	
Er75 Copy disabled	Copy attempted with F638=0	

F641 Low-Frequency Oscillation -Suppression Gain	≤30 kW: 0 disabled; 1 enabled. ≥37 kW: 0– 100.	Factory default: according to model

Higher values provide stronger low-frequency oscillation suppression. F641=0 disables it.
Conditions for V/F low-frequency current-oscillation suppression:
1. F106=2 and F137≤2.
2. F613=0, speed search disabled.

Notes:
1. When enabled, one drive may operate only one motor.
2. Set motor parameters F801– F805 and F844 correctly.
3. With suppression enabled but no motor connected, output voltage may appear unbalanced. This is normal; voltage balances after the motor is connected.

F671 V/F-Separation Voltage Reference Source	0: Digital value F672. 1: AI1. 2: AI2. 3: AI3. 4: Communication. 5: Pulse input. 6: PID output.	Factory default: 0
F672 Digital V/F-Separation Voltage (%)	Range: 0.00– 100.00	Factory default: 100. 0

100% corresponds to motor rated voltage.
- Analog full scale corresponds to rated motor voltage.
- Communication address 2009H accepts integer 0– 10000 for 0– 100.00% rated voltage.
- Pulse-input full frequency corresponds to rated voltage; configure with pulse-input parameters.
- PID output of 100% corresponds to rated voltage.

F673 V/F-Separation Voltage Lower Limit (%)	Range: 0.00– F674	Factory default: 0. 00
F674 V/F-Separation Voltage Upper Limit (%)	Range: F673– 100.00	Factory default: 100.00

F673/F674 limit the voltage command selected by F671. Commands below F673 are clamped to F673; commands above F674 are clamped to F674.

F675 V/F-Separation Voltage Acceleration Time (s)	Range: 0.0– 3000.0	Factory default: 5. 0
F676 V/F-Separation Voltage Deceleration Time (s)	Range: 0.0– 3000.0	Factory default: 5. 0

These are the times for voltage to change between 0 and rated voltage.

F677 V/F-Separation Stop Sequence	0: Voltage and frequency independently decrease to zero according to their own deceleration times. 1: Voltage decreases to zero first, then frequency. 2: Frequency decreases to zero first, then voltage.	Factory default: 0

With setting 0, stop completion is determined when frequency reaches zero.

F678 Input-Voltage Detection in V/F Separation	0: Do not detect. 1: Automatic detection.	Factory default: 0
F679 Input-Voltage Classification Point (V)	Range: 200– 600	Factory default: 430
F680 Classification Hysteresis Band (%)	Range: 0.0– 100.0	Factory default: 0. 5

With F678=1:

- If input voltage > F679 + F679×F680, the input is identified as 4T 380 V.
- If input voltage < F679 − F679×F680, the input is identified as S2 220 V.

Here F680 is applied as a percentage according to the drive implementation.

5. 7 FAULTS AND PROTECTION

F700 Terminal Coast-to-Stop Mode	0: Immediate coast to stop. 1: Delayed coast to stop.	Factory default: 0
F701 Coast-to-Stop / Programmable-Terminal Delay (s)	Range: 0.0– 60.0	Factory default: 0. 0

F700 applies only to a coast-to-stop command received through a terminal.
With F700=0, F701 is ignored and output is blocked immediately.
With F700=1, the drive waits F701 after receiving the signal and then executes coast to stop.

F702 Cooling-Fan Control	0: Temperature controlled. 1: Runs whenever power is ON. 2: Controlled by drive run state. 3: Periodic operation.	Factory default: 2

For E1 frames, value 0 is reserved; temperature-controlled fan operation is not supported.

- Temperature control: fan starts when heatsink temperature reaches the internal threshold.
- Run-state control: fan runs while the drive is running; after stop, operation is governed by heatsink temperature.
- Periodic: otherwise temperature controlled, but if temperature remains low the fan runs for one minute every 24 hours.

Controlled fan operation can extend fan service life.

F704 VFD overload Pre-Alarm Coefficient (%)	Range: 50– 100	Factory default: 80
F705 Motor overload Pre-Alarm Coefficient (%)	Range: 50– 100	Factory default: 80
F706 VFD overload Coefficient (%)	Range: 100～150	Factory default: 120
F707 Motor overload Coefficient (%)	Range: 20～100	Factory default: 100

If output current reaches the corresponding pre-alarm threshold and F300/F301/F302 is assigned function 10 or 11, the assigned output turns ON without tripping the drive.

Sets the overload-trip current relative to drive rated current. Select according to actual load.

When VFD operates a smaller motor, set F707 according to the motor/drive current ratio; see the next page.

$$\text{F707: Motor-Overload Coefficient} = \frac{\text{Actual Motor Rated Current}}{\text{VFD Rated Current} \times 100\%}$$

A smaller F707 provides faster motor overload protectiond under the same conditions.
Example: a 7.5 kW drive rated 17 A operates a 5.5 kW motor rated 12 A. Set F707=12/17×100%≈70%.

The source then describes a one-minute overload trip at the applicable high-current point shown in Figure 5-16. Use the plotted overload curve for exact trip-time interpretation.

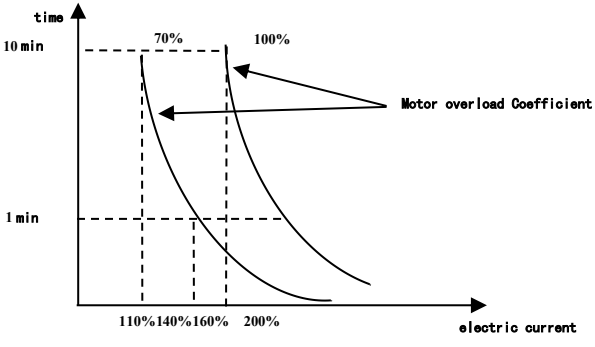

Figure 5-16 Motor overload Coefficient Setting

At output frequencies below 10 Hz, a standard self-cooled motor has reduced cooling, so the overload threshold is lowered. Figure 5-17 shows the frequency-dependent protection curves for F707=100%:

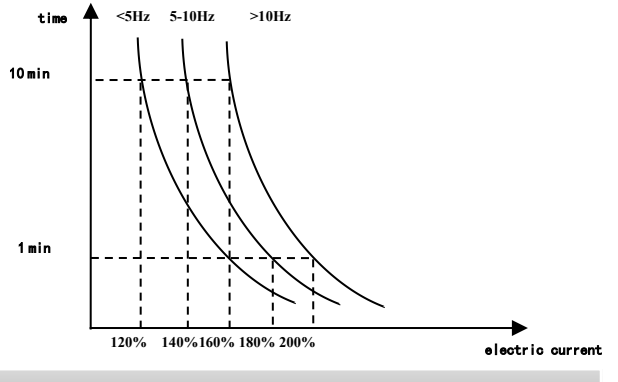

Figure 5-17 Motor overload Protection at Different Frequencies

F708 Most Recent Fault Type	Recorded fault values: 2: OC overcurrent. 3: OE overvoltage. 4: PF1 input phase loss. 5: OL1 drive overload. 6: LU input undervoltage. 7: OH drive overheat. 8: OL2 motor overload. 11: ESP external emergency stop. 12: Err3 current fault before run. 13: Err2 no motor connected during auto-tuning. 15: Err4 current-sampling fault. 16: OC1 overcurrent protection. 17: PF0 output phase loss. 18: Reserved. 23: Err5 PID parameter-setting error. 32: PCE PMSM offset fault. 45: CE communication timeout. 49: Err6 watchdog fault.	
F709 Second Most Recent Fault Type		
F710 Third Most Recent Fault Type		
Most Recent Fault Data F711 Fault frequency (Hz)		
Most Recent Fault Data F712 Fault current (A)		
Most Recent Fault Data F713 DC-bus voltage (V)		
Second Most Recent Fault Data F714 Frequency		
Second Most Recent Fault Data F715 current		
Second Most Recent Fault Data F716 DC-bus voltage		
Third Most Recent Fault Data F717 Frequency		
Third Most Recent Fault Data F718 current		
Third Most Recent Fault Data F719 DC-bus voltage		
Cumulative Fault Counters F720 Overcurrent trips		
Cumulative Fault Counters F721 Overvoltage trips		
Cumulative Fault Counters F722 Overheat trips		
Cumulative Fault Counters F723 Overload trips		

F724 Input Phase-Loss Protection	0: Disabled; 1: enabled	Factory default: 1
F725 Undervoltage Reset Mode	1: Manual reset. 2: Automatic reset.	Factory default: 2
F726 Overheat Protection	0: Disabled; 1: enabled	Factory default: 1
F727 Output Phase-Loss Protection	0: Disabled; 1: enabled.	Factory default: according to model
F728 Input Phase-Loss Filter Time (s)	Range: 0.1– 60.0	Factory default: 0. 5
F730 Overheat Filter Time (s)	Range: 0.1– 60.0	Factory default: 5. 0
F732 Undervoltage Threshold (V)	Range: 100– 450	Factory default: according to model

Note: models rated 7.5 kW and below do not provide input phase-loss protection.

During running, when undervoltage occurs:

- F725=1: even after DC-bus voltage recovers, the undervoltage indication remains and manual reset is required.
- F725=2: the indication resets automatically when voltage recovers.

Input undervoltage means the AC input voltage is too low. Input phase loss means one phase of a three-phase supply is missing. Output phase loss means one drive output phase or one motor conductor is open.

F737 OC1 Protection Enable	0: Disabled; 1: enabled.	Factory default: 1
F738 OC1 Coefficient	Range: 0.50– 3.00	Factory default: 2.5
F739 OC1 Trip Count		

OC1 coefficient = overcurrent level / drive rated current. It cannot be modified while running.

“ OC1” is displayed when the condition occurs.

F741 Analog Wire-Break Protection	0: No action. 1: Fault stop; display AErr. 2: Stop without displaying AErr. 3: Continue at lower frequency. 4: Reserved.	Factory default: 0
F742 Wire-Break Threshold (%)	Range: 1– 100	Factory default: 50

Wire-break protection is disabled if F400 or F406 is set below 0.10 V. AI3 has no wire-break protection. When F741=1, 2, or 3, setting F400/F406 to approximately 1– 2 V is recommended to avoid nuisance trips from interference; adapt to the application.

Analog Wire-Break Threshold
Detection voltage = analog-input lower limit × F742%.
Example: AI1 F400=1.00 V and F742=50% causes wire-break protection below 0.5 V.

F745 Overheat Pre-Alarm Threshold (%)	Range: 0– 100	Factory default: 80
F747 Automatic Carrier-Frequency Reduction	0: Disabled; 1: enabled.	Factory default: 1

If an output is assigned function 16, it turns ON when heatsink temperature reaches the corresponding pre-alarm threshold.
When heatsink temperature rises, the drive can automatically reduce carrier frequency to lower drive heating and avoid an OH trip. This function is disabled when random carrier F159=1.

F753 Motor Type for Overload Protection	0: Standard motor. 1: Inverter-duty motor.	Factory default: 1

- Standard motor: cooling deteriorates at low speed, so the electronic thermal threshold is reduced below 30 Hz.
- Inverter-duty motor: forced or speed-independent cooling does not require low-speed derating.

F754 Zero-Current Detection Level (%)	Range: 0– 200	Factory default: 5
F755 Zero-Current Detection Time (s)	Range: 0.0– 60.0	Factory default: 0. 5

When output current remains below F754 for F755, an output assigned Zero Current Detection turns ON.

F760 Ground-Fault Protection	0: Disabled. 1: Test at power-up. 2: Test before every run. 3: Test at power-up and before every run.	Factory default: 3

Applicable only to 4T models. If U/V/W is shorted to ground or insulation impedance is too low, the drive detects high earth leakage and displays GP, fault code 26. During the test, U/V/W carries test voltage for a short time.

F776 Ground-Test Restart Delay (s)	Range: 0.0– 3600.0.	Factory default: 2.0

When ground-fault protection is enabled, the drive skips a new ground test if the time between stop and restart is less than F776.

5.8 MOTOR PARAMETERS

F800 Motor Auto-tuning Selection	0: No auto-tuning. 1: Rotating auto-tuning. 2: Stationary auto-tuning.	Factory default: 0
F801 Rated power (kW)	0.1～1000	default according to model
F802 Rated voltage (V)	1～440	
F803 Rated current (A)	0.2～6553.5	
F804 Number of poles	2～100	Factory default: 4
F805 Rated speed (r/min)	1～39000	
F810 Rated frequency (Hz)	1.00～590.0	Factory default: 50.00
F870 Back-EMF (mV/r/min), line-to-line RMS	0.1～999.9	default according to model
F871 D-axis inductance (mH)	0.01～655.35	
F872 Q-axis inductance (mH)	0.01～655.35	
F873 Stator phase resistance (Ω)	0.001～65.535	

Enter F801– F805 and F810 from the motor nameplate. Accurate rated data is essential for successful identification and good control performance. Use a motor with a rating reasonably matched to that of the drive a large capacity mismatch significantly degrades performance.

F800=0 —No Auto-tuning

Still enter F801– F803, F805, and F810 correctly. The drive loads default motor parameters F806– F809 based on F801. These defaults are only reference values for a Y-series, four-pole, 50 Hz induction motor. For a synchronous motor, manually enter F870– F873 if accurate data is available.

F800=1 —Rotating Auto-tuning

Disconnect the load or ensure the motor can run unloaded. Enter F801– F805 and F810, press RUN, and " TEST" appears. The drive performs two stationary test stages, accelerates according to F114, runs for a period, and decelerates according to F115. Completion details continue on the next page.

At completion, induction-motor parameters are stored in F806– F809 and F844; PMSM parameters are stored in F870– F873. F800 automatically returns to 0.

F800=2 —Stationary Auto-tuning
Use when the motor cannot be disconnected from the load or cannot rotate unloaded. Press RUN; “ TEST” appears and the drive performs two stationary test stages.
• Induction motor: stator resistance, rotor resistance, and leakage inductance are stored in F806– F808. Mutual inductance uses a default value generated from motor power; it may also be entered manually.
• PMSM: electrical parameters are stored in F870– F873. F870 back-EMF is theoretically calculated; obtain an accurate value from the motor manufacturer where possible.
F800 returns to 0 after completion.

Important:
1. For either method, enter F801– F805 and F810 from the nameplate. Manufacturer data may be entered manually.
2. The source states that pole count F804 is automatically generated from rated speed and is view-only, although the parameter table lists a setting range. Follow the behavior of the actual firmware.
3. Incorrect motor parameters can cause unstable or failed operation. Accurate identification is fundamental to vector-control performance.
4. Changing F801 refreshes F806– F809 to model-based defaults.
5. Motor parameters can change after prolonged heating. Where the load can be disconnected, repeating auto-tuning before commissioning is recommended.

F870– F873 are PMSM parameters and are not changed by F160 factory restoration. Units:
• F870: 0.1 mV per r/min, line-to-line RMS back-EMF.
• F871/F872: 0.01 mH.
• F873: 0.001 Ω phase resistance.

F806 Stator Resistance	≤30 kW: 0.001– 65.53 Ω. >30 kW: 0.1– 6553 mΩ.	Factory default: according to model
F807 Rotor Resistance	≤30 kW: 0.001– 65.53 Ω. >30 kW: 0.1– 6553 mΩ.	Factory default: according to model

F808 Leakage Inductance (mH)	≤30 kW: 0.01– 655.3 mH. >30 kW: 0.001– 65.53 mH.	Factory default: according to model
F809 Mutual Inductance (mH)	≤30 kW: 0.01– 655.3 mH. >30 kW: 0.001– 65.53 mH.	Factory default: according to model
F844 Motor No-Load Current (A)	Range: 0.1– F803	Factory default: according to model

F806– F809 update automatically after successful identification. If auto-tuning cannot be performed, enter known parameters from a similar motor.

- F844 is obtained automatically by rotating auto-tuning.
- If actual no-load current is high, reduce F844 moderately.
- If loaded running current or loaded starting current is high, increase F844 moderately.

Example Rotating Autotune

Motor: 3.7 kW, 380 V, 8.8 A, 1440 r/min, 50 Hz; load disconnected.

Sequence: set F801=3.7, F802=380, F803=8.8, F805=1440, F810=50, set F800=1, press RUN, " TEST" appears, target frequency flashes, measurement completes with " OK" .

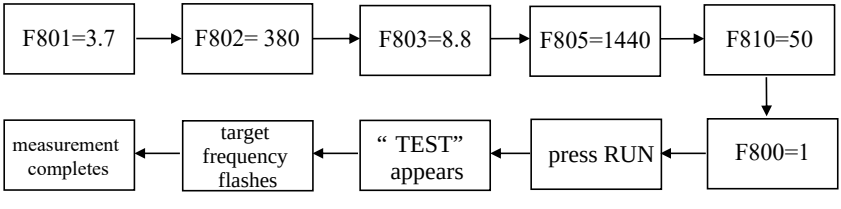

Figure 5-18

F812 Pre-Excitation Time (s)	Range: 0.00– 30.00	Factory default: 0.30

If pre-start DC braking is enabled, pre-excitation time is F604. Otherwise it is F812. Pre-excitation establishes motor flux before acceleration for faster torque response. A value of 0 disables pre-excitation.

F813 Speed-loop KP1		Factory default: according to model
F814 Speed-loop KI1		
F815 Speed-loop KP2		
F816 Speed-loop KI2		
F817 PI Switching Frequency 1 (Hz)	0～F818	
F818 PI Switching Frequency 2 (Hz)	F817～F111	

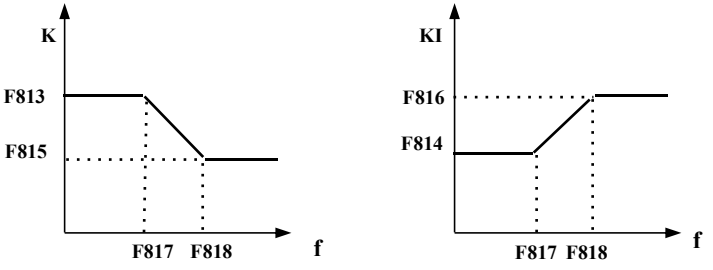

Figure 5-19 PI Gain Scheduling

Adjusting proportional and integral gains changes vector-control dynamic response. Increasing KP and reducing KI generally speeds response, but excessive adjustment can cause oscillation.

Recommended procedure:

1. Make small changes from factory values.
2. If loaded torque capability is weak or speed rises slowly, increase KP while ensuring stability, then reduce KI moderately to speed response.
3. If current or speed oscillates, reduce KP and increase KI.
4. If the required direction is uncertain, reduce KP first; if ineffective, increase it. Adjust KI only after KP.

Cautions:

- Incorrect KP/KI can cause severe oscillation or prevent normal operation.
- F813– F818 are shared by induction and synchronous motor control.

PMSM Initial-Position Identification F866 Enable	0: Disabled. 1: Enabled for every start. 2: Enabled only for the first run after power-up.	Factory default: 2
F867 Identification Current (%)	Range: 0– 100	Factory default: 80
F868 Identification Injection Frequency (Hz)	Range: 500– 16000	Factory default: 16000

F867 Sets current used during rotor-position identification.

F868 Sets the high-frequency voltage injection frequency.

F866 – F868 apply only to synchronous motors.

F875 Position-Identification Angle Compensation	Range: 0– 1000	Factory default: 0

Compensates the identified angle to obtain correct rotor position.

F876 PMSM No-Load Injection Current (%)	Range: 0.0– 100.0	Factory default: 30.0
F878 PMSM Injection-Current Compensation Cutoff (%)	Range: 0.0～50.0	Factory default: 10.0
F880 PMSM PCE Detection Time (s)	Range: 0.0～10.0	Factory default: 0.2

F876 Percentage of PMSM rated current.

F878 Percentage of PMSM rated frequency.

Example: F876=30 and F878=10. Injection current remains at 30% below 10% rated frequency, decreases progressively above 10%, and reaches 0 at 20% rated frequency, twice F878.

F880 Sets the detection time for PMSM PCE protection.

5.9 COMMUNICATION PARAMETERS

F900 Communication Address	1– 255: individual drive address. 0: broadcast address.	Factory default: 1
F901 Communication Mode	1: ASCII. 2: RTU.	Factory default: 2
F902 Stop Bits	Range: 1 – 2	Factory default: 2
F903 Parity	0: None. 1: Odd. 2: Even.	Factory default: 0
F904 Baud Rate (bit/s)	0: 1200. 1: 2400. 2: 4800. 3: 9600. 4: 19200. 5: 38400. 6: 57600.	Factory default: 3

9600 bit/s is recommended for stable operation.

F905 Communication Timeout (s)	Range: 0.0– 3000	Factory default: 0

F905=0 disables timeout protection. With F905≠0, if no valid host command is received within the specified time, the drive displays CE.

See Appendix 4, Communication Manual, for protocol details.

5.10 PID PARAMETERS

5.10.1 Built-In PID and Constant-Pressure Water Supply

The built-in PID controller can be used for single-pump or dual-pump automatic constant-pressure water supply and other simple closed-loop systems.

Example 1 —Remote Pressure Gauge

If FA02=1, AI1 feedback:

- Connect 10V to the gauge supply terminal. If the gauge requires 5 V, use an external 5 V supply.
- Connect the gauge signal to AI1.
- Connect the gauge ground to GND.

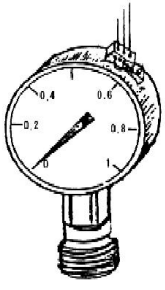

If FA02=2, AI2 feedback:

- Connect 10V to the gauge supply terminal, or use an external 5 V supply if req
- Connect the signal to AI2.
- Connect ground to GND.

Example 2 —24 V, 4– 20 mA Pressure Transmitter

Connect the transmitter’ s 4– 20 mA output to AI2. Jumper CM to GND. Connect the transmitter supply terminal to the drive’ s 24V terminal.

5.10.2 Parameter Description

FA00 Water-Supply Operating Mode	0: Single-drive mode / general PID control. 1: Fixed dual-pump mode. 2: Timed alternation mode.	Factory default: 0

- FA00=0: one motor/pump or another closed-loop process such as pressure or flow.
- FA00=1: one motor fixed as VFD pump and one fixed as mains-frequency pump.
- FA00=2: two pumps alternate as the VFD-controlled pump according to time FA25.

FA01 PID Setpoint Source	0: Digital setpoint FA04. 1: AI1. 2: AI2. 3: AI3 potentiometer. 4: FI pulse-frequency input at DI1.	Factory default: 0

With FA01=0, FA04 and Modbus setpoint commands are both available.

FA02 PID Feedback Source	1: AI1. 2: AI2. 3: FI pulse-frequency input at DI1. 4: Communication. 8: AI1−AI2. 9: AI1+AI2. 10: Max(AI1, AI2). 11: Min(AI1, AI2).	Factory default: 1

For communication feedback, host address 2030H accepts integer 0– 1000 for 0– 100.0%.

FA03 PID Upper Limit (%)	Range: FA04– 100.0.	Factory default: 100.0
FA04 PID Digital Setpoint (%)	Range: FA05– FA03	Factory default: 50.0
FA05 PID Lower Limit (%)	Range: 0.0– FA04	Factory default: 0.0

Water-Supply Interpretation

• Negative action, normal pressure control: if feedback exceeds FA03, pressure protection acts immediately, the drive coasts to a stop, and " nP" is displayed. If feedback falls below setpoint minus dead-zone, the drive increases speed or adds a pump.

• Positive action: if feedback exceeds setpoint plus dead-zone, this represents low process demand according to the selected process direction and the drive increases speed/adds a pump as defined by the application. If feedback falls below FA05, pressure protection acts and " nP" is displayed.

Example with a 0– 1.6 MPa transducer:

FA04=70% ➞ 1.12 MPa.

FA03=90% ➞ 1.44 MPa.

FA05=5% ➞ 0.08 MPa.

FA06 PID Action	0: Direct action 1: Reverse action	Factory default: 1

FA06＝0: Direct action —higher feedback produces higher motor speed.

FA06＝1: Reverse action —lower feedback produces higher motor speed.

FA07 Sleep Enable	0: Enabled. 1: Disabled.	Factory default: 1

With FA07=0, when PID output remains at lower frequency FA09 for sleep delay FA10 , the drive coasts to a stop and displays " SLP" .

FA09 PID Lower Frequency (Hz)	Range: F112– F111	Factory default: 5.00

Minimum frequency permitted during PID regulation.

FA10 Sleep Delay (s)	Range: 0.0– 500.0	Factory default: 15.0

FA11 Wake-Up Delay (s)	Range: 0.0– 3000	Factory default: 3.0

After nP or SLP, the drive waits FA11, then checks the restart condition. In reverse action it restarts when feedback is below the PID lower condition; in direct action it restarts when feedback is above the PID upper condition. Otherwise it continues waiting.

FA12 PID Output Upper Frequency (Hz)	Range: FA09– F111	Factory default: 50.00
FA18 Allow Setpoint Change During PID Operation	0: Disabled. 1: Enabled.	Factory default: 1

With FA18=0 and FA01≠0, the first setpoint sampled after power-up is retained; changes during standby or operation are ignored.

FA19 Proportional Gain P	Range：0.00～10.00	Factory default: 0.30
FA20 Integral Time I (s)	Range：0.1～100.0	Factory default: 0.3
FA21 Derivative Time D (s)	Range：0.0～10.0	Factory default: 0.0
FA22 PID Sampling Period (s)	Range：0.1～10.0	Factory default: 0.1

Increasing P, reducing I time, and increasing D time generally speed response. Excessive P, too-short I, or excessive D can cause oscillation. Recommended tuning: make small changes from defaults; first increase P while maintaining stability, then reduce I; increase D only if required and keep it modest. A shorter FA22 gives faster regulation.

Figure 5-20 shows the PID algorithm with target, feedback, sensor, feedback gain/filter, P/I/D terms, output limiting, and controlled process.

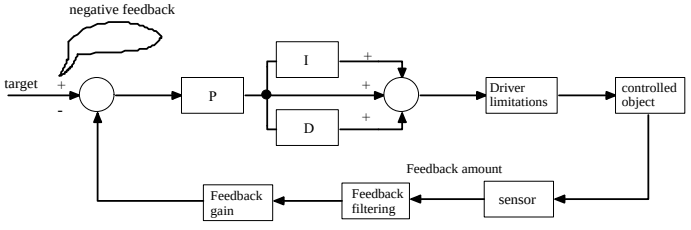

Figure 5-20 PID algorithm

FA23 Negative PID Frequency Output	0: Disabled; output range FA09 to FA12. 1: Enabled; output range −FA12 to +FA12. 2: Negative output only; range −FA12 to 0.	Factory default: 0

A negative sign commands reverse operation.

FA24 Timed-Alternation Unit	0: Hours. 1: Minutes.	Factory default: 0
FA25 Timed-Alternation Interval	Range: 1– 9999	Factory default: 100

Unit is selected by FA24.

FA26 Underload-Protection Method	0: No protection. 1: Contact-based underload protection. 2: PID-based underload protection. 3: Current-based underload protection.	Factory default: 0
FA27 Underload Current Threshold (%)	Range: 10– 150	Factory default: 80
FA66 Underload Duration (s)	Range: 0.0– 60.0	Factory default: 20.0 s for 7.5 kW and below; 1.0 s for 37 kW and above.

Underload protection is often used for process or energy-efficiency reasons rather than direct equipment overload protection. Pump or fan efficiency can become poor below a certain load, and sudden no-load operation can indicate a mechanical fault such as a broken belt or a dry pump.

Underload / Dry-Run Protection

Typical causes include an empty tank or tanker, blocked pump suction, insufficient supply, or loss of liquid. Field indications include zero or reduced outlet pressure, reduced motor current, and increased pump temperature.

FA26=1 —Contact Method

Assign separate No-Water and Water-Present inputs. No-Water active immediately enters protection and displays “ EP” . When Water-Present remains active for FA28, protection clears automatically.

FA26=2 —PID Method

If PID output reaches upper frequency and current is below FA27×motor rated current, the drive immediately enters PID underload protection and displays “ EP2” .

FA26=3 —Current Method

- In PID mode: if current remains below FA27×motor rated current for FA66, “ EP3” occurs.
- Outside PID mode: the same condition applies when the drive is running at upper frequency.

FA28 Underload-Protection Wake-Up Time (min)	Range: 1– 3000	Factory default: 60

After protection, wait FA28 and check whether EP/EP2 has cleared. Restart immediately when the condition disappears; otherwise continue waiting. STOP resets the protection and stops the drive.

FA29 PID Dead-zone (%)	Range: 0.0～10.0	Factory default: 2.0
FA30 VFD-Pump Restart Delay (s)	Range: 2.0～999.9	Factory default: 20.0
FA31 Mains-Pump Start Delay (s)	Range: 0.1～999.9	Factory default: 30.0
FA32 Mains-Pump Stop Delay (s)	Range: 0.1～999.9	Factory default: 30.0

The deadband reduces oscillation at the cost of regulation accuracy. Example: FA29=2 and FA04=70 gives no PID correction between feedback 68 and 72. It also determines pump staging thresholds.

In negative-action dual-pump control, when PID remains at upper frequency for FA31 and pressure is still below setpoint minus dead-zone, the drive stops the VFD pump by coasting and starts the mains pump. After FA30, the drive restarts the VFD pump for PID regulation. In direct-action applications, the comparison direction is reversed.

After the mains pump is running:

- Negative action: if pressure rises above the setpoint, the drive reduces the VFD pump to lower frequency; after FA32 it disconnects the mains pump and continues PID control with the VFD pump.
- Direct action: the comparison is reversed.

FA33 Constant-Pressure Water-Supply Stop Method	0: Coast to stop. 1: Deceleration stop.	Factory default: 0

Applies when the VFD pump is removed or when nP, SLP, EP, and related conditions occur.

FA36 Enable Relay 1	0: Not used; 1: used.	Factory default: 0
FA37 Enable Relay 2	0: Not used; 1: used.	Factory default: 0

Relay 1 corresponds to DO1; Relay 2 corresponds to TA/TC.

FA47 Relay 1 Start Sequence	Range: 1– 20	Factory default: 20
FA48 Relay 2 Start Sequence	Range: 1– 20	Factory default: 20

These define pump start order in dual-pump control.

Values 1 and 2 must not be duplicated, and one of FA47/FA48 must be set to 1; otherwise “ Err5” is displayed.

Values 3– 20 are ineffective.

FA58 Fire-Fighting Pressure Setpoint (%)	Range: 0.0– 100.0	Factory default: 80.0

Also called the second pressure.

When the fire-pressure switching input is active during PID control, the pressure target changes to FA58.

FA59 Emergency Fire-Fighting Mode	0: Disabled. 1: Emergency fire mode 1. 2: Emergency fire mode 2.	Factory default: 0

When enabled and the emergency-fire input is active, normal operation and protection are overridden. For OC or OE, the drive immediately resets automatically and resumes output. This mode can present severe equipment and safety risk and is intended only for emergency fire-service operation.

- Mode 1: run at current target frequency.
- Mode 2: run at FA60.

FA60 Emergency Fire-Fighting Frequency (Hz)	Range: F112– F111	Factory default: 50

FA62 Fire-Alarm Signal Clear Handling	0: Remain in fire mode. 1: Exit fire mode.	Factory default: 0

5. 11 TORQUE-CONTROL PARAMETERS

FC00 Speed/Torque Control Selection	0: Speed control. 1: Torque control. 2: Terminal switching.	Factory default: 0

• Speed control: the drive follows the frequency command; output torque automatically matches load torque, subject to the internal upper limit.

• Torque control: the drive follows a torque command; speed adjusts to the load but is limited by FC23/FC25 . Set both torque command and speed limits appropriately.

• Terminal switching: assign a multi-function input as Torque/Speed Switch. Active = torque control; inactive = speed control.

FC02 Torque Ramp Time (s)	Range: 0.1– 100.0	Factory default: 1.0

Time for torque command to change from 0% to 100% motor rated torque.

FC06 Torque Command Source	0: Digital FC09. 1: AI1. 2: AI2. 3: AI3. 4: FI pulse input.	Factory default: 0
FC07 Torque Command Gain	Range: 0– 3.000	Factory default: 3.000
FC09 Digital Torque Command (%)	Range: 0– 3.000	Factory default: 100.0

Ratio of drive torque to motor rated torque when a non-digital input reaches full scale.

Example: FC06=1, F402=10.00 V, FC07=3.00; AI1=10 V commands 3× rated torque.

FC09 Percentage of motor rated torque.

FC14 Bias-Torque Source	0: Digital FC17. 1: AI1. 2: AI2. 3: AI3. 4: FI.	Factory default: 0
FC15 Bias-Torque Gain	Range: 0– 0.500	Factory default: 0.500
FC16 Bias-Torque Cutoff Speed (%)	Range: 0– 100.0	Factory default: 10.0
FC17 Digital Bias-Torque Command (%)	Range: 0– 50.0	Factory default: 10.00

Bias Torque
For high-inertia loads, bias torque adds extra starting torque to the normal torque command. While actual speed is below FC16, bias torque is supplied by the source selected with FC14. Above FC16 it becomes zero.

For a non-digital source, FC15 is the ratio of full-scale bias torque to motor rated torque. Example: FC14=1, F402=10.00 V, FC15=0.500; AI1=10 V gives 50% rated bias torque.

FC22 Forward Speed-Limit Source	0: Digital FC23. 1: AI1. 2: AI2. 3: AI3. 4: FI.	Factory default: 0
FC23 Forward Speed Limit (%)	Range: 0– 100.0	Factory default: 10.0
FC24 Reverse Speed-Limit Source	0: Digital FC25. 1: AI1. 2: AI2. 3: AI3. 4: FI.	Factory default: 0
FC25 Reverse Speed Limit (%)	Range: 0– 100.0	Factory default: 10.0

At full-scale command, FC23/FC25 specify the speed limit as a percentage of upper frequency F111.

FC28 Motoring-Torque Limit Source	0: Digital FC30. 1: AI1. 2: AI2. 3: AI3. 4: FI.	Factory default: 0
FC29 Motoring-Torque Limit Gain	Range: 0– 3.000	Factory default: 3.000
FC30 Digital Motoring-Torque Limit (%)	Range: 0– 300.0	Factory default: 200.0

FC33 Regenerative-Torque Limit Source	0: Digital FC35. 1: AI1. 2: AI2. 3: AI3. 4: FI.	Factory default: 0
FC34 Regenerative-Torque Limit Gain	Range: 0– 3.000	Factory default: 3.000
FC35 Digital Regenerative-Torque Limit (%)	Range: 0– 300.0	Factory default: 200.0

When the motor is motoring, FC28 selects the torque-limit source. For a non-digital source, FC29 sets the full-scale limit; for digital selection, FC30 sets the limit.

When the motor is regenerating, FC33 selects the regenerative-torque-limit source. For a non-digital source, FC34 sets the full-scale limit; for digital selection, FC35 sets the limit.

5. 12 DISPLAY PARAMETERS

H000 Operating / Target Frequency (Hz)		

While stopped: target frequency. While running: operating frequency.

H001 Load / Target Speed (r/min)		

While stopped: target speed. While running: actual speed.

H002 Output Current (A)		

Displays drive output current while running; 0 while stopped.

H003 Output Voltage (V)		

Displays drive output voltage while running; 0 while stopped.

H004 DC-Bus Voltage (V)		

Displays DC-bus voltage.

H005 PID Feedback (%)		

Displays PID feedback.

H006 Temperature (°C)		

Displays drive temperature.

H007 Count Value		

Displays the DI1 pulse count.

H008 Linear Speed		

Displays calculated linear speed.

H009 PID Setpoint (%)		

Displays PID setpoint.

H012 Output Power (kW)		

Displays drive output power.

H013 Output Torque (%)		
H014 Target Torque (%)		

Display actual and target torque.

H017 Current Multi-Step Number		

Displays the active step in multi-step mode.

H018 Input Pulse Frequency		

Displays DI1 pulse frequency in units of 0.01 kHz.

H019 Feedback Speed (Hz)		
H020 Feedback Speed (r/min)		

Display feedback speed in frequency and rotational-speed units.

H021 AI1 Input Value —digital representation.		
H022 AI2 Input Value —digital representation		
H023 AI3 Input Value —digital representation		

Display the analog-input values

H025 Cumulative Power-On Time (min)		
H026 Cumulative Run Time (min)		

Display total energized and operating time in minutes.

H027 Input Pulse Frequency (Hz)		

Displays DI1 pulse frequency in 1 Hz units. If frequency exceeds 65535 Hz, use H018.

H028 Communication Command Value		

Displays the value commanded through communication.

H029 Cumulative Run Time (s)		

Displays operating time in seconds.

H030 Main Frequency X (Hz)		
H031 Auxiliary Frequency Y (Hz)		

Display the current main and auxiliary references.

H036 Cumulative Power-On Time (h)		
H037 Cumulative Run Time (h)		

Display total energized and operating time in hours.

APPENDIX 1 TROUBLESHOOTING

Do not immediately reset and restart after a fault. Identify and eliminate the cause first. Use the following tables for drive and motor faults. If the problem cannot be resolved, contact the manufacturer or distributor. Do not dismantle or repair the drive without authorization.

Table A1-1 Common Drive Faults

Code / Type	Description	Possible Cause	Corrective Action
Err0	Function code cannot be changed while running	Attempt to modify a run-locked parameter during operation	Stop the drive before changing the parameter.
Err1	Password error	Incorrect password; password protection enabled but not unlocked	Enter the correct user password
2: OC	Overcurrent	Acceleration too short; output short circuit; motor stalled; excessive load; inaccurate motor identification	Increase acceleration time; inspect motor cable; check load/stall; reduce V/F boost; repeat motor auto-tuning correctly.
16: OC1	Overcurrent protection OC1		
67: OC2	Overcurrent protection OC2		
3: OE	DC overvoltage	Supply voltage too high; high load inertia; deceleration too short	Verify rated input voltage; install/select braking resistor; increase deceleration time.
4: PF1	Input phase loss	Missing input phase	Check incoming supply and parameter configuration.
5: OL1	Drive overload	Load too heavy	Reduce load; inspect mechanical equipment; use a larger drive if required.
6: LU	Undervoltage	Input voltage too low	Check supply voltage and protection settings

Code / Type	Description	Possible Cause	Corrective Action
7: OH	VFD overheat	Ambient temperature too high; dirty heatsink; poor ventilation; failed fan; carrier frequency or V/F boost too high.	Improve ventilation; clean air paths and heatsink; install correctly; replace fan; reduce carrier frequency or compensation curve.
8: OL2	Motor overload	Load too heavy	Reduce load; inspect machinery; use a properly sized drive/ motor.
11: ESP	External fault	External emergency-stop input active	Inspecttheexternal fault
12: Err3	Current detected before run	Current-alarm signal present before output starts	Check ribbon-cable connections; request manufacturer service.
13: Err2	Auto-tuning error	No motor connected during measurement	Connect the motor correctly and repeat tuning
15: Err4	Current zero-offset / sampling fault	Loose ribbon cable; damaged current-sensing circuit	Reconnect cable; request service
17: PF0	Output phase loss	Open motor cable; damaged motor; drive fault	Inspect motor cable; replace/repair motor; contact manufacturer.
18: Aerr	Analog wire-break protection	Poor analog connection; broken signal cable; damaged signal source	Re-terminate or replace cable; replace/repair signal source.
19: EP3 20:EP/EP2	Underload protection	Dry pump; broken belt; mechanical fault	Restore water supply; replace belt; repair equipment.
22: nP	Pressure protection	Pressure too high in reverse-action control or too low in direct-action control	suggests reducing the PID lower-frequency setting.
23: Err5	PID parameter error	Invalid or inconsistent PID settings	Correct the PID parameters
24: SLP	Sleep state	Drive has entered PID sleep	Normal operating state
26: GP	Ground-fault protection; not available on S2/T2	Damaged motor cable to ground; motor insulation fault; drive fault	Replace cable; repair motor; contact manufacturer.

32: PCE	PMSM loss of synchronism	Acceleration too short; load too heavy; motor stalled	Increase acceleration time; check motor load and mechanical blockage.
35: OH1	PTC / external thermal protection	External thermal relay has operated	Check the external thermal-protection device and motor temperature.
44: Er44	Slave communication lost	Communication fault between master and slave	Check wiring, baud rate, and master/slave communication parameters.
45: CE	Communication timeout	Communication failure; host did not send periodic command	Check communication cable and host polling.
47: EEEP	EEPROM read/write fault	Electrical interference; EEPROM damaged	Eliminate interference; contact manufacturer.
49: Err6	Watchdog fault	Watchdog input timed out	Check watchdog signal and F326/F327
53: CE1	Keypad disconnection	External remote keypad/cable disconnected	Inspect remote keypad cable and connectors

Note: Single-phase drives and three-phase 4T models rated 11 kW and below do not provide PF1 input phase-loss protection, according to this appendix.

Table A1-2 Motor Faults

Symptom	Possible Cause	Corrective Action
Motor does not run	No supply; incorrect wiring; incorrect settings; excessive load; damaged motor; drive fault protection	Energize supply; correct wiring and settings; remove fault; reduce load; troubleshoot according to Table A1-1.
Wrong direction	U/V/W sequence incorrect; parameter direction incorrect	Correct phase sequence or direction parameters.
Motor runs but speed cannot be changed	Frequency-reference wiring error; operating mode set incorrectly; excessive load	Correct wiring and settings; reduce load.
Speed too high or too low	Incorrect motor selection; transmission ratio mismatch; incorrect drive parameters; abnormal output voltage	Select correct motor; set the correct transmission ratio; correct parameters; check VVVF characteristics.
Unstable rotation	Excessive load; large load fluctuation; motor phase loss; motor fault	Reduce load and fluctuation; increase drive/motor capacity if necessary; correct wiring; repair motor.
Upstream breaker trips	Excessive line current	Inspect input wiring; select the correct breaker rating; reduce load; eliminate the drive fault.

APPENDIX 2 PRODUCT AND FRAME TABLES

The A700 Series covers 0.4– 75 kW. Operate the drive below rated output current. Short-time overload is permitted only within the specified overload duration.

Table A2-1 A700 Series Product List

Model	Motor Power (kW)	Rated Output Current (A)	Frame	Weight (kg)	Cooling	Enclosure / Mounting
A700-4T0007-E1F2 71B-XX	0.75	2.0	E1	1.3	Forced air	Three-phase 380 V, plastic enclosure, wall-mounted
A700-4T0015-E1F2 71B-XX	1.5	4.0	E1	1.3	Forced air	
A700-4T0022-E2F2 73B-XX	2.2	6.5	E2	2.0	Forced air	
A700-4T0030-E2F2 73B-XX	3.0	7.6	E2	2.0	Forced air	
A700-4T0040-E2F2 73B-XX	4.0	9.0	E2	2.1	Forced air	
A700-4T0055-E2F2 73B-XX	5.5	12.0	E2	3.2	Forced air	
A700-4T0075-E4F2 73B-XX	7.5	17	E4	3.5	Forced air	
A700-4T0110-E4F2 73B-XX	11	23	E4	3.6	Forced air	
A700-4T0150-E5F2 73B-XX	15	32	E5	5.0	Forced air	
A700-4T0185-E5F2 73B-XX	18.5	38	E5	5.1	Forced air	
A700-4T0220-E6F2 73B-XX	22	44	E6	8.3	Forced air	
A700-4T0300-E6F2 73B-XX	30	60	E6	9.0	Forced air	
A700-4T0370-E7F2 75N-XX	37	75	E7	15.3	Forced air	
A700-4T0450-E7F2 75N-XX	45	90	E7	15.3	Forced air	

A700-4T0550-C4F2 75N-XX	55	110	C4	23	Forced air	
A700-4T0750-C5F2 75N-XX	75	150	C5	36	Forced air	

Table A2-2 A700 Series Frame Dimensions

Frame	Overall Dimensions A × B(B1) × H(H1)	Mounting W × L	Mounting Screw	Enclosure / Mounting
E1	80×135（142）×138（153）	70×128	M4	Plastic, wall-mounted
E2	106×150（157）×180（195）	94×170	M4	
E3	106×170（177）×180（195）	94×170	M4	
E4	142×152（159）×235（248）	126×225	M5	
E5	161×170（177）×265（280）	146×255	M5	
E6	210×196（202）×340（358）	194×330	M5	
E7	265×235（242）×435（465）	235×412	M6	
C4	315×234×480	274×465	M6	Metal, wall-mounted
C5	360×265×555	320×530	M8	
C6	410×300×630	370×600	M10	
C7	516×326×765	360×740	M10	

All dimensions in mm.

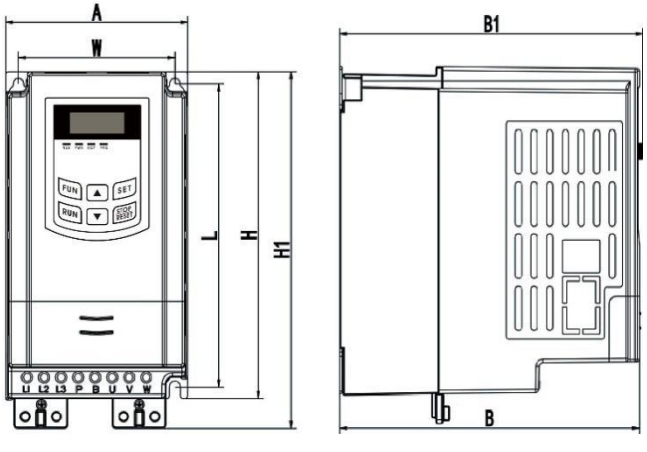

the plastic-enclosure outline and dimension labels.

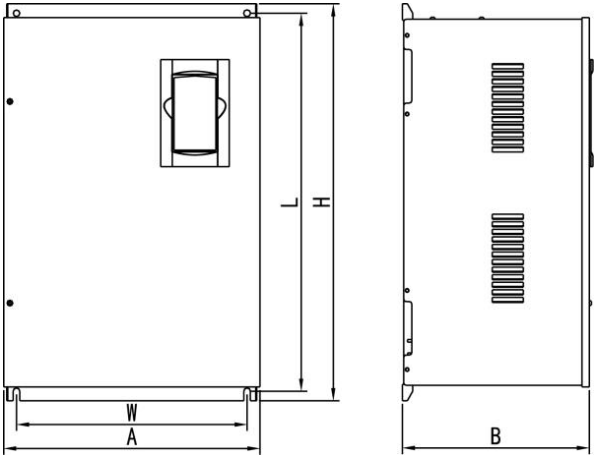

the wall-mounted metal-enclosure outline and dimension labels

Dimension Notes

1. B1 is the overall depth with a potentiometer on the local keypad.
2. B is the overall depth without a potentiometer on the local keypad.
3. H1 is the overall height including the grounding shield/plate.

APPENDIX 3 RECOMMENDED BRAKING RESISTORS

Drive Model	Motor Power	Min Resistance	Min Resistor Power	Recommended Resistance / Power
A700-4T0007-E1F271 B-XX	0.75	145	80W	300Ω/300W
A700-4T0015-E1F271 B-XX	1.5	95	150W	150Ω/300W
A700-4T0022-E2F273 B-XX	2.2	95	250W	
A700-4T0030-E2F273 B-XX	3.0	90	300W	90Ω/1.5KW
A700-4T0040-E2F273 B-XX	4.0	90	400W	
A700-4T0055-E2F273 B-XX	5.5	90	550W	
A700-4T0075-E4F273 B-XX	7.5	90	750W	
A700-4T0110-E4F273 B-XX	11	50	1.1kW	50Ω/1.5KW
A700-4T0150-E5F273 B-XX	15	30	1.5kW	30Ω/3KW
A700-4T0185-E5F273 B-XX	18.5	30	2.0kW	
A700-4T0220-E6F273 B-XX	22	30	2.2kW	
A700-4T0300-E6F273 B-XX	30	25	3.0kW	
A700-4T0370-E7F275 N-XX	37	25	4.0kW	
A700-4T0450-E7F275 N-XX	45	15	4.0kW	15Ω/4KW

CAUTION: With high-inertia loads, the braking resistor may become very hot.
Increase resistor power rating above the minimum/recommended value where required by the braking duty.

Do not use a resistance lower than the stated minimum. Select thermal protection, enclosure, wiring, and duty rating for the actual application.

APPENDIX 4 COMMUNICATION MANUAL

1 Modbus Overview

Modbus is an asynchronous serial communication protocol and a common language used by PLCs and other controllers. It defines a message structure that a controller can recognize regardless of the network used to carry it. No proprietary physical interface is required; RS-485 is typical.

2 Modbus Protocol

2.1 Transmission Modes

2.1.1 Packet Format

ASCII Mode

Start	Address Domain	Function domain	data domain				LRC verification		End	
: (0x3A)	Drive address	Function code	Data length	Data 1	… …	Data N	LRC high byte	LRC low byte	CR (0x0D)	LF (0x0A)

RTU Mode

Start	Address Domain	Functional domain	data domain	CRC verification		End
T1-T2-T3-T4	Drive address	Function code	N data bytes	CRC low byte	CRC high byte	T1-T2-T3-T4

2.1.2 ASCII Data Representation

Each binary byte is transmitted as two ASCII characters. Example: hexadecimal 31H is represented by characters “ 3” and “ 1” , transmitted as ASCII 33H and 31H.

Hex Digit	0	1	2	3	4	5	6	7
ASCII Code	30H	31H	32H	33H	34H	35H	36H	37H
Hex Digit	8	9	A	B	C	D	E	F
ASCII Code	38H	39H	41H	42H	43H	44H	45H	46H

2.1.2 RTU Data Representation

Transmit each byte directly as its hexadecimal value. Example: 31H is placed directly into the packet.

2.2 Supported Baud Rates

VFD	Baud Rates
A700	1200, 2400, 4800, 9600, 19200, 38400, 57600

2.3 Character Frame

ASCII Mode

Bit	Function
1	1 start bit,
7	7 data bits,
0/1	optional 1 parity bit, and 1 or 2 stop bits.
1/2	With parity, use one stop bit; without parity, use two stop bits.

RTU Mode

Bit	Function
1	1 start bit,
8	8 data bits,
0/1	optional 1 parity bit, and 1 or 2 stop bits.
1/2	With parity, use one stop bit; without parity, use two stop bits.

2. 4 Error Detection

2. 4. 1 ASCII Mode —LRC

The LRC covers all bytes except the starting colon and ending CR/LF. Add the 8-bit message bytes without retaining carries, take the one’ s complement, and add 1.

2.4.2 RTU Mode —CRC-16

The message data is treated as a continuous binary sequence. Conceptually it is multiplied by 2^16 and divided by the polynomial:

2^16 + 2^15 + 2^2 + 1,

represented as binary 11000000000000101.

The quotient is discarded and the 16-bit remainder is appended as the two CRC bytes. The CRC register is initialized to all 1s so an all-zero message is not accepted without detection. A correct message plus CRC produces a zero remainder when checked against the same polynomial.

The source describes the mathematical bit order in detail; the implementable register algorithm is given on the next page.

CRC-16 Register Algorithm

Because serial devices normally transmit the least-significant bit first, the bit order of the polynomial is reversed for the practical shift-register implementation. The polynomial used in the right-shift algorithm is 0xA001.

Steps:

a. Load a 16-bit register with all bits set to 1, 0xFFFF.

b. XOR the low byte of the register with the first message byte.

c. Shift the 16-bit register right by one bit.

d. If the shifted-out bit is 1, XOR the register with 0xA001; if 0, do not XOR.

e. Repeat Steps c– d eight times.

f. XOR the next message byte into the register.

g. Repeat until all message bytes have been processed.

h. Append the resulting CRC to the message with the low byte first and high byte second, as shown in the RTU packet format.

2.4.3 Converting RTU to ASCII

1. Remove the RTU CRC and calculate an LRC instead.
2. Convert each binary byte into two ASCII hexadecimal characters; example 0x03 ➞ 0x30, 0x33.
3. Add the starting colon " :" (0x3A).
4. Add CR and LF, 0x0D and 0x0A.

The following examples therefore focus on RTU; equivalent ASCII packets can be generated by these steps.

2.5 Command Types and Formats

2.5.1 Supported Function Codes

Command Types	name	description
03	Read Holding Registers	read the current values of one or more registers, maximum 10 registers per request according to this table.
06	Preset Single Register	write a specific value to one holding register

2.5.2 Communication Addresses

2.5.2.1 Function-Code Parameter Addressing

Remove " F" from the high-byte group and convert the low decimal portion to hexadecimal.

Examples:

- F114: group F1 ➞ high byte 01; decimal 14 ➞ hexadecimal 0E; address 010EH.
- F201: group F2 ➞ high byte 02; decimal 01 ➞ hexadecimal 01; address 0201H.

Important Parameter-Access Notes

A single request may read no more than six function-code parameters or write one function-code parameter, according to this section. Some functions are read-only, some are neither readable nor writable, some cannot be changed while running, and some cannot be changed in any state. Observe parameter ranges, units, and related instructions to avoid unintended operation.

2.5.2.2 Non-Function-Code Register Addresses

All addresses and values in this section are hexadecimal. For example, 1000H equals decimal 4096.

2.5.2.2.1 Operating-State Registers —Read-Only

Address	Description
1000	Output frequency, 0.01 Hz
1001	Output voltage, V
1002	Output current, 0.01 A
1003	High byte: motor pole count. Low byte: frequency-source selection
1004	DC-bus voltage, V
1005	High byte: transmission ratio. Low byte: drive status. Drive Status Low Byte 00H Standby. 01H Forward running. 02H Reverse running. 04H Overcurrent OC. 05H DC overvoltage OE. 06H Input phase loss PF1. 07H Drive overload OL1. 08H Undervoltage LU. 09H Overheat OH. 0AH Motor overload OL2. 0BH Interference/error Err. 0CH LL. 0DH External fault ESP. 0EH Err3. 0FH Err2. 11H Current-sampling fault Err4. 12H OC1. 13H Output phase loss PF0. 14H Reserved. 19H Invalid PID settings Err5. 2FH Communication timeout CE. 30H Speed-search fault FL. 33H Watchdog fault Err6.

1006	Outputtorque,0.1%
1007	Driveheatsinktemperature,°C
1008	PIDsetpoint,0.1%
1009	PIDfeedback,0.1%
100A	Outputpowerasinteger;fractional partdiscarded
100B	DIinputstatus:DI1– DI8correspondtobits0– 7
100C	Output status: bit 0 DO1; bit 1 DO2, not present below 7.5 kW; bit 2 fault relay
100D	AI1 raw value, 0 – 4095
100E	AI2 raw value, 0 – 4095
100F	AI3 raw value, 0 – 4095
1010	Reserved
1011	Input pulse-frequency percentage, 0 – 100.00%
1012	Output pulse-frequency percentage, 0 – 100.00%
1013	Current multi-step number: 0111 Step 8; 0000 Step 1; 1000 Step 9; 0001 Step 2; 1001 Step 10; 0010 Step 3; 1010 Step 11; 0011 Step 4; 1011 Step 12; 0100 Step 5; 1100 Step 13; 0101 Step 6; 1101 Step 14; 0110 Step 7; 1110 Step 15; 1111 none.
1014	Reserved
1015	AO1 output percentage, 0 – 100.0%
1016	AO2 output percentage, 0 – 100.0%
1017	Current speed
1018	Output power with one decimal place
101A	Extended output current, 0.01 A, for values that overflow 1002H.
101B	101A high 16 bits; 101B low 16 bits.
101D	Drive ready: 0 not ready; 1 ready
102B	Output current, 0.1 A

2.5.2.2.2Control Registers —Write-Only

Address	Description
2000 Note1	Command Register 0001 Forward run, no additional parameter. 0002 Reverse run, no additional parameter. 0003 Deceleration stop. 0004 Coast to stop. 0005 Start forward jog. 0006 Stop forward jog. 0007 Reserved. 0008 Run without direction. 0009 Fault reset. 000A Start reverse jog. 000B Stop reverse jog.
2001 Note2	Remote-Control / EEPROM Lock 0001 Unlock remote control. 0002 Lock remote control; all remote-control commands are ignored until unlocked. 0003 Unlock EEPROM writes; writes update both RAM and EEPROM. 0004 Lock EEPROM writes; writes update RAM only.
2002	Host-Controlled AO1 Output Write 0– 1000 for 0– 100.0% analog output.
2003	Host-Controlled AO2 Output Write 0– 1000 for 0– 100.0% analog output.
2004	Host-Controlled FO Pulse Output Write 0– 1000 for 0– 100.0% pulse output.
2005	Control DO1 0 OFF; 1 ON.
2006	Control DO2 0 OFF; 1 ON

2007	Control relay output: 0 OFF; 1 ON
2009	Host V/F-separation voltage command
2030	PID feedback command
10D	Target frequency F113, as listed in the source

Notes:

1. Not every model supports every command listed for 2000H.
2. Factory configuration permits the host to write RAM only. To write EEPROM, unlock with 2001H= 0003 or set F219=0.

If an output terminal is used only under host control, set its normal terminal function to 0.

2.5.2.2.3 Exception Responses

Description	function code	Exception data
Slave Parameter Response	the most significant bit of the function code is set to 1	0001 Illegal function. 0002 Illegal data address. 0003 Illegal data value. 0004 Slave-device failure.

Exception 0004 occurs when:

1. A non-reset command is sent while the drive is faulted.
2. A non-unlock command is sent while remote control is locked.

2.5.3 Scaling of Communication Values

Frequency value = actual value ×100.

Time value = actual value ×10.

Current value = actual value ×100.

Voltage value = actual value ×1.

Power register 100AH = actual value ×1.

Power register 1018H = actual value ×10.

Transmission ratio = actual value ×100.

Software version = actual value ×100.

The transmitted parameter value is the integer in the packet. Divide by the applicable scaling factor to obtain the actual engineering value.

CAUTION: Do not include decimal points in transmitted data. No data value may exceed 65535; otherwise overflow occurs.

3 Communication-Related Function Codes

Function Code	Definition	Range	Factory Default
F200	Start-Command Source	0 Keypad; 1 terminals; 2 keypad+terminals; 3 Modbus; 4 keypad+terminals+Modbus	4
F201	Stop-Command Source	0 Keypad; 1 terminals; 2 keypad+terminals; 3 Modbus; 4 keypad+terminals+Modbus	4
F203	Main Frequency Source X	0 Stored digital reference. 1 AI1. 2 AI2. 3 Reserved in this appendix table. 4 Multi-step speed. 5 Non-stored digital reference. 6 AI3. 7 Reserved. 8 Reserved. 9 PID. 10 Modbus.	0
F900	Drive Address	1～255	1
F901	Modbus Mode	1：ASCII 2：RTU	2
F903	Parity	0 none; 1 odd; 2 even.	0

F904	Baud Rate (bps)	0: 1200 1: 2400 2: 4800 3: 9600 4: 19200 5: 38400 6: 57600	3

When controlling the drive from a PLC or other intelligent device, configure all communication-related function codes and ensure both ends use identical address, mode, baud rate, parity, stop-bit, and timeout settings.

4 **Physical Interface**

4.1 Terminals

RS-485 uses terminals A+ and B−.

4.2 Fieldbus Topology

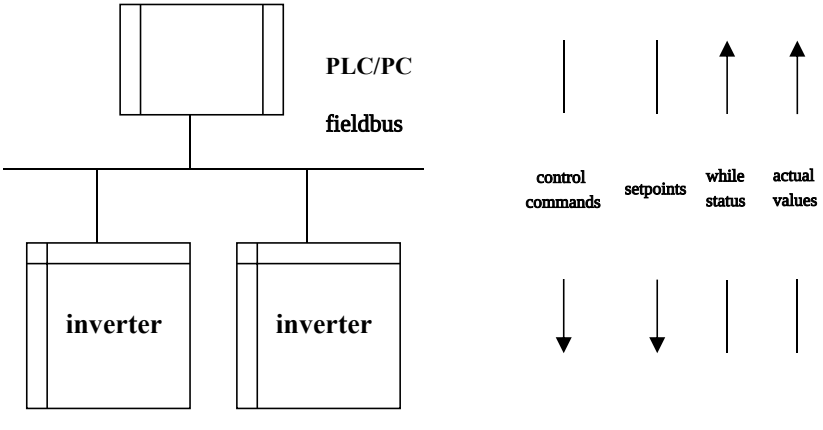

The drive uses half-duplex RS-485. Connect devices in a daisy-chain/bus topology. Do not use star or branched wiring, because reflections can disrupt communication.

Use shielded twisted-pair cable. Route it away from power wiring; do not run it parallel with power cables and never bundle them together.

Because the link is half-duplex, only one drive may transmit to the host at a time. Simultaneous transmission by two or more drives causes bus contention, communication failure, and potentially high current in interface components.

4.3 Grounding and Termination

Install a 120 Ω termination resistor across A+ and B− at each physical end of the RS-485 bus. Do not install termination resistors at intermediate devices.

Do not directly ground either RS-485 signal conductor at any point. Ground every device through its own protective-earth terminal. Never allow grounding conductors to form a closed loop.

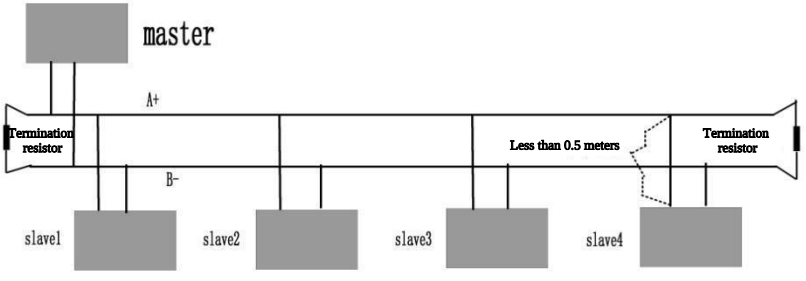

Communication System Connection Diagram

Consider the drive capability of the computer/PLC interface and the total cable distance. Install an RS-485 repeater if the host cannot drive the network reliably.

Perform all communication wiring with power removed from the drive.

5 Common Command Examples

Example 1 —RTU: Change acceleration time F114 of drive address 01 to 10.0 s

Master request:

Address	Function	High byte of register	Low byte of register	Write to the high byte of the parameter status	Write the low byte of the parameter status	CRC low byte	CRC high byte
01	06	01	0E	00	64	E8	1E

Function code F114 10.0 Second

Normal slave response echoes the request:

Address	Function	High byte of register	Low byte of register	Write to the high byte of the parameter status	Write the low byte of the parameter status	CRC low byte	CRC high byte
01	06	01	0E	00	64	E8	1E

Function code F114 Normal response

Response when a slave device is not functioning normally:

Address	Function	Exception	CRC low byte	CRC high byte
01	86	04	43	A3

Most significant bit of the function code1 Slave unit failure

Example 2 —Read output frequency, output voltage, output current, and pole count/frequency-source selection from drive address 02.

Master request Address	Function	The high-order address of the first register	The low-order address of the first register	The high-order bits of the register count	The lower bits of the register count	CRC low byte	CRC high byte
02	03	10	00	00	04	40	FA

Communication Parameter Address 1000H

Slave response :

Address	Function	bytes	High byte of data	low byte of data	High byte of data	low byte of data	High byte of data	low byte of data	High byte of data	low byte of data	CRC low byte	CRC high byte
02	03	08	13	88	01	7C	00	3C	02	00	82	F6

Output frequency Output voltage Output current Frequency source selection (F207)

For VFD No. 2, the output frequency is 50.00 Hz, the output voltage is 380 V, and the output current is 6.0 A; the motor has 2 poles, and the frequency source is set to the main frequency control mode.

Example 3 —Start drive address 01 in forward direction.

Master request：

Address	Function	High byte of register	Low byte of register	Write to the high byte of the parameter status	Write the low byte of the parameter status	CRC low byte	CRC high byte
01	06	20	00	00	01	43	CA

Communication Parameter Address2000H Forward operation

Slave device responds normally:

Address	Function	High byte of register	Low byte of register	Write to the high byte of the parameter status	Write the low byte of the parameter status	CRC low byte	CRC high byte
01	06	20	00	00	01	43	CA

Normal response

Response when a slave device is not functioning normally:

Address	Function	Exception	CRC low byte	CRC high byte
01	86	01	83	A0

Set the most significant bit of the function code to 1 Invalid function code (hypothetical)

Example 4 —Read F113 and F114 from drive address 02.

Master request:

Address	Function	High byte of register	Low byte of register	The high-order portion of the register count	The lower-order bits of the register count	CRC low byte	CRC high byte
02	03	01	0D	00	02	54	07

Function code F113 Number of registers to read

Slave device responds normally:

Address	Function	bytes	High byte of the first parameter's status	Low byte of the first parameter's status	High byte of the second parameter's status	Low byte of the second parameter's status	CRC low byte	CRC high byte
02	03	04	03	E8	00	78	49	61

The actual value is 10.00 The actual value is 12.0

Response when a slave device is not functioning normally:

Address	Function	Exception	CRC low byte	CRC high byte
02	83	01	70	F0

Most significant bit of the function code set to 1 Invalid function code

APPENDIX 5 WATER-SUPPLY SYSTEM REFERENCE WIRING

1、One Drive Controlling Two Pumps —Fixed Mode

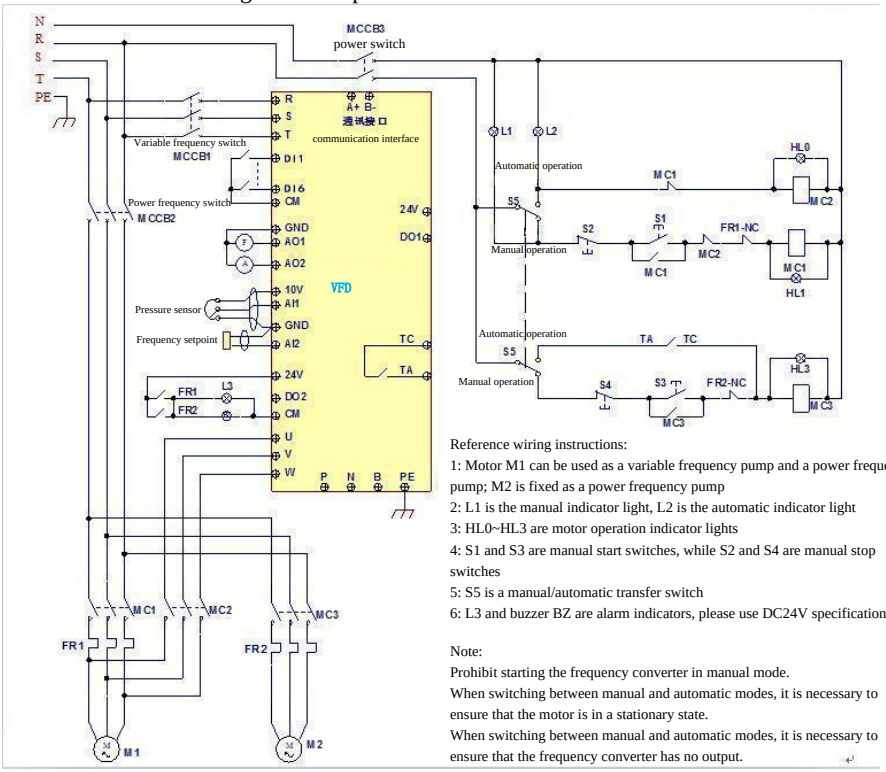

Reference wiring instructions:

1: Motor M1 can be used as a variable frequency pump and a power frequency pump; M2 is fixed as a power frequency pump

2: L1 is the manual indicator light, L2 is the automatic indicator light

3: HL0~HL3 are motor operation indicator lights

4: S1 and S3 are manual start switches, while S2 and S4 are manual stop switches

5: S5 is a manual/automatic transfer switch

6: L3 and buzzer BZ are alarm indicators, please use DC24V specifications

Note:

Prohibit starting the frequency converter in manual mode.

When switching between manual and automatic modes, it is necessary to ensure that the motor is in a stationary state.

When switching between manual and automatic modes, it is necessary to ensure that the frequency converter has no output.

Use the wiring diagram on this page together with the pressure-gauge wiring instructions.

Procedure

（1）. Wire as shown, verify all connections, and close main power breaker MCCB3.

（2）. Set the drive parameters. Example using two-wire control:

F208=1, or select another required start/stop method.

F203=9, PID frequency source.

FA00=1, fixed dual-pump mode.

FA36=1, FA37=1, enable both pump-control outputs.

FA47=1, FA48=2, pump-output sequence.

FA04 = required pressure setpoint as a percentage.

FA03 = pipeline maximum-pressure limit.

FA05 = pump-start pressure percentage / lower PID limit.

（3）. For manual control, close mains-pump breaker MCCB2:

Press S1 to run pump M1 directly from mains.

Press S2 to stop M1.

Press S3 to run pump M2 directly from mains.

Press S4 to stop M2.

（4）. Close VFD breaker MCCB1 and mains-pump breaker MCCB2.

Energize the drive. Short DI3 to run forward, or DI4 for reverse if appropriate. Pump M1 operates as the VFD-controlled pump.

If pressure is insufficient, the drive accelerates to upper frequency. If pressure is still insufficient after FA31, the drive coasts M1 to a stop and starts pump M2 directly from mains. After delay FA30, the drive restarts M1 as the VFD pump.

With both pumps running, if pressure is excessive, the drive reduces to lower frequency. If pressure remains excessive for FA32, mains pump M2 is disconnected.

If only VFD pump M1 operates at lower frequency for FA10, the drive coasts to a stop, enters sleep, and displays “ SLP” .

2、One Drive Controlling Two Pumps —Timed Alternation Mode

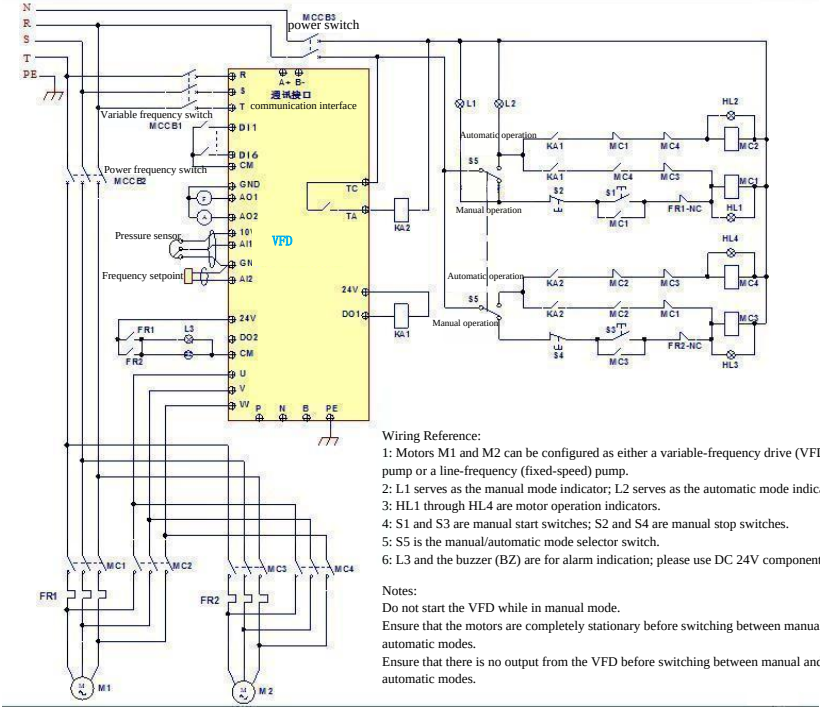

Wiring Reference:

1: Motors M1 and M2 can be configured as either a variable-frequency drive (VFD) pump or a line-frequency (fixed-speed) pump.

2: L1 serves as the manual mode indicator; L2 serves as the automatic mode indicator.

3: HL1 through HL4 are motor operation indicators.

4: S1 and S3 are manual start switches; S2 and S4 are manual stop switches.

5: S5 is the manual/automatic mode selector switch.

6: L3 and the buzzer (BZ) are for alarm indication; please use DC 24V components.

Notes:

Do not start the VFD while in manual mode.

Ensure that the motors are completely stationary before switching between manual and automatic modes.

Ensure that there is no output from the VFD before switching between manual and automatic modes.

（1）. Wire according to the diagram and pressure-gauge instructions. Verify wiring and close MCCB3.

（2）. Example parameters:

- F208=1, or another required start/stop method.
- F203=9.
- FA00=2, timed alternation.
- FA36=1, FA37=1.
- FA47=1, FA48=2.
- FA04 = pressure setpoint percentage.
- FA03 = pipeline maximum-pressure limit.
- FA05 = pump-start pressure percentage.

（3）. Manual control: close MCCB2. S1 starts M1 on mains, S2 stops M1, S3 starts M2 on mains, and S4 stops M2.

（4）. Automatic control: close MCCB1 and MCCB2.

- On initial operation, KA1 selects M1 as the VFD pump and DI3 runs the drive forward. If pressure is insufficient, the drive accelerates to upper frequency. If still insufficient after FA31, the drive coasts M1 to a stop and KA2 starts M2 on mains. After FA30, the drive restarts M1 as the VFD pump.
- After alternation interval FA25, whose unit is selected by FA24 and whose timer becomes active after power-up, all pumps coast to a stop. KA2 then selects M2 as the VFD pump. If pressure is insufficient and remains so after FA31, the drive stops M2 and KA1 starts M1 on mains. After FA30, the drive restarts M2 under VFD control.
- With both pumps running, if pressure remains excessive after the VFD has reduced to lower frequency for FA32, the mains pump is disconnected.
- If the single VFD pump operates at lower frequency for FA10, the drive coasts to a stop, enters sleep, and displays “ SLP” .

APPENDIX 6 FUNCTION-CODE QUICK REFERENCE

Basic Parameters

○*

Code	Function	Setting Range	Default	Change	Address
F100	User password	0～9999		√	0x0100
F102	Drive rated current		Model-dependent	○*	0x0102
F103	Drive rated power		Model-dependent	○*	0x0103
F105	Software version		Model-dependent	△	0x0105
F106	Control mode	0 SVC; 2 V/F; 3 vector control 1; 6 PMSM SVC	2	×	0x0106
F107	Password protection	0 disabled; 1 enabled	0	√	0x0107
F108	User password setting	0～9999	8	√	0x0108
F109	Starting frequency (Hz)	0.0～10.00	0.0	√	0x0109
F110	Starting-frequency hold time (s)	0.0～999.9	0.0	√	0x010A
F111	Upper frequency (Hz)	F113～590.0	50.00	√	0x010B
F112	Lower frequency (Hz)	0.00～F113	0.50	√	0x010C
F113	Target frequency (Hz)	F112～F111	50.00	√	0x010D
F114	First acceleration time (s)	0.1～3000	Model-dependent	√	0x010E
F115	First deceleration time (s)	0.1～3000		√	0x010F
F116	Second acceleration time (s)	0.1～3000	Model-dependent	√	0x0110
F117	Second deceleration time (s)	0.1～3000		√	0x0111
F119	Accel/decel time reference	0：0～50 1：0～F111	0	×	0x0113
F120	Forward/reverse dead time (s)	0.0～3000	0.0	√	0x0114

F122	Reverse prohibited	0 disabled; 1 enabled	0	×	0x0116
F123	Negative frequency in combined reference	0 disabled; 1 enabled	0	×	0x0117
F124	Jog frequency (Hz)	F112～F111	5.00	√	0x0118
F125	Jog acceleration time (s)	0.1～3000	根据机型	√	0x0119
F126	Jog deceleration time (s)	0.1～3000		√	0x011A
F127	Skip-frequency point A (Hz)	0.00～590.0	0.00	√	0x011B
F128	Skip band A (Hz)	0.00～2.50	0.00	√	0x011C
F129	Skip-frequency point B (Hz)	0.00～650.0	0.00	√	0x011D
F130	Skip band B (Hz)	0.00～2.50	0.00	√	0x011E
F131	Running display selection	Bit values: 0 frequency/code; 1 speed; 2 current; 4 output voltage; 8 DC bus; 16 PID feedback; 32 temperature; 64 count; 128 linear speed; 256 PID setpoint; 512/1024 reserved; 2048 output power; 4096 output torque	0+1＋2＋4＋8＝15	√	0x011F
F132	Stopped display selection	0 frequency/code; 1 keypad jog; 2 target speed; 4 DC bus; 8 PID feedback; 16 temperature; 32 count; 64 PID setpoint; 128/256 reserved; 512 torque setpoint	2＋4＝6	√	0x0120

F133	Driven-system transmission ratio	0. 10～200. 0	1. 00	√	0x0121
F134	Drive-wheel radius (m)	0. 001～1. 000	0. 001	√	0x0122
F136	Slip compensation (%)	0～10	0	×	0x0124
F137	Torque-compensation mode	0 linear; 1 power curve; 2 custom multi-point; 3 automatic; 4 V/F separation	0	×	0x0125
F138	Linear compensation	1～20	Model-dependent	×	0x0126
F139	Power-curve compensation	1 1.5 power; 2 1.8; 3 1.9; 4 square law; 5 reserved	1	×	0x0127
F140	Voltage-compensation break frequency (Hz)	0～F142	1. 00	×	0x0128
F141	Voltage compensation 1 (%)	0～100	Model-dependent	×	0x0129
F142	Custom frequency point F2 (Hz)	F140～F144	5. 00	×	0x012A
F143	Custom voltage point V2 (%)	0～100	13	×	0x012B
F144	Frequency point F3 (Hz)	F142～F146	10. 00	×	0x012C
F145	Voltage point V3 (%)	0～100	24	×	0x012D
F146	Frequency point F4 (Hz)	F144～F148	20. 00	×	0x012E
F147	Voltage point V4 (%)	0～100	45	×	0x012F
F148	Frequency point F5 (Hz)	F146～F150	30. 00	×	0x0130
F149	Voltage point V5 (%)	0～100	63	×	0x0131
F150	Frequency point F6 (Hz)	F148～F810	40. 00	×	0x0132
F151	Voltage point V6 (%)	0～100	81	×	0x0133
F152	Output voltage at break frequency (%)	0～100	100	×	0x0134
F153	Carrier frequency	Model-dependent	Model-dependent	×	0x0135
F154	Automatic voltage regulation	0 disabled; 1 always enabled; 2 disabled during deceleration only	0	×	0x0136

F155	Digital auxiliary frequency (Hz)	0～F111	0	×	0x0137
F156	Auxiliary-frequency polarity	0～1	0	×	0x0138
F157	Auxiliary-frequency monitor			△	0x0139
F158	Auxiliary polarity monitor			△	0x013A
F159	Random carrier selection	0 disabled; 1 enabled	1	×	0x013B
F160	Restore factory defaults	0 no; 1 restore	0	×	0x013C

RUN CONTROL

Code	Function	Setting Range	Default	Change	Address
F200	Start-command source	0 keypad; 1 terminals; 2 keypad + terminals; 3 Modbus; 4 keypad + terminals + Modbus	4	×	0x0200
F201	Stop-command source	0 keypad; 1 terminals; 2 keypad + terminals; 3 Modbus; 4 keypad + terminals + Modbus	4	×	0x0201
F202	Direction-reference mode	0 forward locked; 1 reverse locked; 2 terminal reference	0	×	0x0202
F203	Main frequency source X	0 digital reference with memory; 1 external analog AI1; 2 external analog AI2; 3 pulse input; 4 multi-step speed; 5 digital reference without memory; 6 analog AI3; 7 reserved; 8 reserved; 9 PID; 10 Modbus	0	×	0x0203
F204	Auxiliary frequency source Y	0 digital reference with memory; 1 external analog AI1; 2 external analog AI2; 3 pulse input; 4 multi-step speed; 5 PID; 6 analog AI3	0	×	0x0204
F205	Auxiliary frequency Y range basis	0 relative to upper frequency; 1 relative to main frequency X	0	×	0x0205

F206	Auxiliary frequency Y range (%)	0～100	100	×	0x0206
F207	Frequency-source selection	0 X; 1 X+Y; 2 X or Y by terminal switch, X has priority when not switched; 3 X or X+Y by terminal switch; 4 multi-step speed/analog combination; 5 X−Y; 6 X+Y−YMAX×50%; 9 X/Y; 10 Max(X,Y); 11 Min(X,Y)	0	×	0x0207
F208	Terminal two-wire/ three-wire run control	0 none/other mode; 1 two-wire mode 1; 2 two-wire mode 2; 3 three-wire mode 1; 4 three-wire mode 2; 5 directional pulse start/stop	0	×	0x0208
F209	Motor stopping mode	0 decelerate to stop; 1 coast to stop	0	×	0x0209
F210	Frequency display increment (Hz/s as printed in this quick table)	0. 01～10. 00	0. 01	√	0x020A
F211	Digital frequency adjustment rate	0. 01～100. 00	5. 00	√	0x020B
F212	Direction memory	0 disabled; 1 enabled	0	√	0x020C
F213	Automatic restart after power restoration	0 disabled; 1 enabled	0	√	0x020D
F214	Automatic restart after reset	0 disabled; 1 enabled	0	√	0x020E
F215	Automatic-start delay (s)	0. 1～3000	60. 0	√	0x020F
F216	Repeated fault-restart attempts	0～5	0	√	0x0210
F217	Repeated restart interval (s)	0. 0～10. 0	3. 0	√	0x0211
F219	Communication writes to EEPROM	0 allowed; 1 prohibited	1	√	0x0213

F220	Frequency-memory function	0 disabled; 1 enabled	0	√	0x0214
F222	Counter-memory selection	0 disabled; 1 enabled	0	√	0x0216
F224	Action when target frequency is below lower limit	0 stop; 1 run at lower frequency	0	×	0x0218
F226	Skip-frequency processing mode	0 disabled during acceleration and deceleration; 1 disabled during deceleration; 2 enabled throughout	0	×	0x021A
F277	Third acceleration time (s)	0. 1～3000	Model-dependent	√	0x024D
F278	Third deceleration time (s)			√	0x024E
F279	Fourth acceleration time (s)			√	0x024F
F280	Fourth deceleration time (s)			√	0x0250

Multifunction Input/Output

Code	Function	Setting Range	Default	Change	Address
F300	Relay status output	0 no function; 1 VFD fault protection; 2 above characteristic frequency 1; 3 above characteristic frequency 2; 4 coast-to-stop status; 5 VFD running 1; 6 DC braking active; 7 accel/decel-time switching; 8 preset count reached; 9 specified count reached; 10 VFD overload pre-alarm; 11 motor overload pre-alarm; 12 stall active; 13 VFD ready; 14 VFD running 2; 15 frequency reached; 16 overheat pre-alarm; 17 characteristic current reached; 18 analog-input loss protection; 19 underload protection; 20 zero-current detection; 21 host writes DO1; 22 host writes DO2; 23 host writes TA/TC; 24 watchdog status; 25– 27 reserved; 28 sleep; 30 mains-frequency pump running; 31 VFD-controlled pump running; 32 pressure-limit exceeded; 33– 40 reserved	1	√	0x0300
F301	DO1 status output		14	√	0x0301
F302	DO2 status output		5	√	0x0302
F303	DO1 output-mode selection	0 switching-level output; 1 pulse output	0	√	0x0303
F304	S-curve starting-section ratio (%)	2. 0～50. 0	30. 0	√	0x0304
F305	S-curve ending-section ratio (%)	2. 0～50. 0	30. 0	√	0x0305
F306	Acceleration/ deceleration profile	0 linear; 1 S-curve	0	×	0x0306

F307	Characteristic frequency 1 (Hz)	F112～F111	10. 00	√	0x0307
F308	Characteristic frequency 2 (Hz)	F112～F111	50. 00	√	0x0308
F309	Characteristic-frequency hysteresis width (%)	0～100	50	√	0x0309
F310	Characteristic current (A)	0～1000	Rated current	√	0x030A
F311	Characteristic-current hysteresis width (%)	0～100	10	√	0x030B
F312	Frequency-reached threshold (Hz)	0. 00～5. 00	0. 00	√	0x030C
F313	Counter division ratio	1～65000	1	√	0x030D
F314	Preset count	F315～65000	1000	√	0x030E
F315	Specified count	1～F314	500	√	0x030F
F316	DI1 function	0 no function; 1 run; 2 stop; 3 multi-step speed 1; 4 multi-step speed 2; 5 multi-step speed 3; 6 multi-step speed 4; 7 reset; 8 coast to stop; 9 external emergency stop; 10 inhibit acceleration/deceleration; 11 forward jog; 12 reverse jog; 13 UP frequency increase; 14 DOWN frequency decrease; 15 FWD forward; 16 REV reverse; 17 three-wire X enable; 18 accel/decel-time switch 1; 19 reserved; 20 reserved;	11	√	0x0310
F317	DI2 function		9	√	0x0311
F318	DI3 function		15	√	0x0312
F319	DI4 function		16	√	0x0313

F320	DI5 function	21 frequency-source switch; 22 counter input; 23 counter reset; 30 water-shortage signal; 31 water-present signal; 32 firefighting-pressure switch; 33 emergency firefighting control; 34 accel/decel-time switch 2; 37 normally-open thermal protection; 38 normally-closed thermal protection; 53 watchdog; 54 frequency reset; 61 start/stop terminal.	7	√	0x0314
F321	DI6 function		8	√	0x0315
F322	DI7 function		1	√	0x0316
F323	DI8 function		2	√	0x0317
F324	Coast-to-stop terminal logic	0 positive logic; 1 negative logic	0	×	0x0318
F325	External emergency-stop terminal logic	0 positive logic; 1 negative logic	0	×	0x0319
F326	Watchdog timeout (s)	0.0 disables watchdog; 0.1– 3000	10. 0	√	0x031A
F327	Watchdog stop selection	0 immediate stop; 1 decelerate to stop	0	×	0x031B
F328	Terminal filtering count	1～100	20	√	0x031C
F330	Digital-input terminal status display			△	0x031E
F331	AI1 analog-input monitor			△	0x031F
F332	AI2 analog-input monitor			△	0x0320
F333	AI3 analog-input monitor			△	0x0321
F335	Relay-output diagnostic	0 output inactive; 1 output active	0	×	0x0323
F336	DO1 output diagnostic		0	×	0x0324
F337	DO2 output diagnostic		0	×	0x0325
F338	AO1 output diagnostic	0～4095	0	×	0x0326
F339	AO2 output diagnostic	0～4095	0	×	0x0327

F340	Terminal negative-logic selection	0 disabled; 1 DI1; 2 DI2; 4 DI3; 8 DI4; 16 DI5; 32 DI6; 64 DI7; 128 DI8. Add values to select multiple terminals.	0	√	0x0328
F343	DI1 ON-delay time (s)	0. 00～99. 99	0. 00	√	0x032B
F344	DI2 ON-delay time (s)	0. 00～99. 99	0. 00	√	0x032C
F345	DI3 ON-delay time (s)	0. 00～99. 99	0. 00	√	0x032D
F346	DI4 ON-delay time (s)	0. 00～99. 99	0. 00	√	0x032E
F347	DI5 ON-delay time (s)	0. 00～99. 99	0. 00	√	0x032F
F348	DI6 ON-delay time (s)	0. 00～99. 99	0. 00	√	0x0330
F351	DI1 OFF-delay time (s)	0. 00～99. 99	0. 00	√	0x0333
F352	DI2 OFF-delay time (s)	0. 00～99. 99	0. 00	√	0x0334
F353	DI3 OFF-delay time (s)	0. 00～99. 99	0. 00	√	0x0335
F354	DI4 OFF-delay time (s)	0. 00～99. 99	0. 00	√	0x0336
F355	DI5 OFF-delay time (s)	0. 00～99. 99	0. 00	√	0x0337
F356	DI6 OFF-delay time (s)	0. 00～99. 99	0. 00	√	0x0338
F359	Stop-command priority	0 disabled; 1 enabled	0	√	0x033B
F360	DO-terminal negative logic	0 disabled; 1 DO1; 2 DO2; 4 relay 1. Add values to select multiple outputs.	0	√	0x033C

Analog and pulse input/output

Code	Function	Setting Range	Default	Change	Address
F400	AI1 input lower limit (V)	0.00～F402	0.04	√	0x0400
F401	AI1 setting corresponding to lower limit	0～F403	1.00	√	0x0401
F402	AI1 input upper limit (V)	F400～10.00	10.00	√	0x0402
F403	AI1 setting corresponding to upper limit	0.00～2.00	2.00	√	0x0403
F404	AI1 proportional gain K1	0.0～10.0	1.0	√	0x0404
F405	AI1 filter time constant (s)	0.01～10.00	0.10	√	0x0405
F406	AI2 input lower limit (V)	0.00～F408	0.04	√	0x0406
F407	AI2 setting corresponding to lower limit	0～F409	1.00	√	0x0407
F408	AI2 input upper limit (V)	F406～10.00	10.00	√	0x0408
F409	AI2 setting corresponding to upper limit	0.00～2.00	2.00	√	0x0409
F410	AI2 proportional gain K2	0.0～10.0	1.0	√	0x040A
F411	AI2 filter time constant (s)	0.01～10.00	0.10	√	0x040B
F412	AI3 input lower limit (V)	0.00～F414	0.05	○	0x040C
F413	AI3 setting corresponding to lower limit	0～F415	1.00	√	0x040D
F414	AI3 input upper limit (V)	F412～10.0	10.00	○	0x040E
F415	AI3 setting corresponding to upper limit	Max（1.00，F413）～2.00	2.00	√	0x040F
F416	AI3 proportional gain K3	0.0～10.0	1.0	√	0x0410

F417	AI3 filter time constant (s)	0. 01～10. 00	0. 10	√	0x0411
F418	AI1 0-Hz voltage dead-zone (V)	0～1. 00	0. 00	√	0x0412
F419	AI2 0-Hz voltage dead-zone (V)	0～1. 00	0. 00	√	0x0413
F420	AI3 0-Hz voltage dead-zone (V)	0– 0.50, positive/negative	0. 00	√	0x0414
F421	Display-keypad selection	1 local/remote automatic switching; 2 both local and remote display.	1	○ √	0x0415
F422	Keypad potentiometer selection	0 local-keypad potentiometer; 1 remote-keypad potentiometer	0	√	0x0416
F423	AO1 output-range selection	0 0– 5 V; 1 0– 10 V or 0– 20 mA; 2 4– 20 mA	1	√	0x0417
F424	Frequency corresponding to minimum AO1 output (Hz)	0. 0～F425	0. 05	√	0x0418
F425	Frequency corresponding to maximum AO1 output (Hz)	F424～F111	50. 00	√	0x0419
F426	AO1 output compensation (%)	0～120	100	√	0x041A
F427	AO2 output range	0：0～20mA； 1：4～20mA	0	√	0x041B
F428	Frequency corresponding to minimum AO2 output (Hz)	0. 0～F429	0. 05	√	0x041C
F429	Frequency corresponding to maximum AO2 output (Hz)	F428～F111	50. 00	√	0x041D
F430	AO2 output compensation (%)	0～120	100	√	0x041E
F431	AO1 analog-output signal selection	0 running frequency; 1 output current; 2 output voltage; 3 analog AI1; 4 analog AI2; 5 reserved;	0	√	0x041F

F432	AO2 analog-output signal selection	6 reserved; 7 host-controller command; 8 target frequency.	1	√	0x0420
F433	External voltage-meter full scale corresponding to current	0.01– 5.00 times rated current	2	×	0x0421
F434	External ammeter full scale corresponding to current	0.01– 5.00 times rated current	2	×	0x0422
F437	Analog filtering width	1～100	10	√	0x0425
F438	AI1 input type	0 voltage; 1 current	0	×	0x0426
F439	AI2 input type	0 voltage; 1 current	1	×	0x0427
F440	FI pulse-input minimum frequency (kHz)	0.00～F442	0.00	√	0x0428
F441	Setting corresponding to FI minimum frequency	0.00～F443	1.00	√	0x0429
F442	FI pulse-input maximum frequency (kHz)	F440～100.00	10.00	√	0x042A
F443	Setting corresponding to FI maximum frequency	Max（1.00，F441）～2.00	2.00	√	0x042B
F445	FI pulse-input filter constant	0～1000	0	√	0x042D
F446	FI 0-Hz frequency dead-zone (kHz)	0– F442, positive/negative	0.00	√	0x042E
F448	FI proportional gain	0.001～2.000	1.000	√	0x0430
F449	FO maximum output pulse frequency (kHz)	0.00～100.00	10.00	√	0x0431
F450	FO output-pulse zero-offset coefficient (%)	0.0～100.0	0.0	√	0x0432
F451	FO output-pulse frequency gain	0.00～10.00	1.00	√	0x0433

F453	FO output-pulse signal selection	0 running frequency; 1 output current; 2 output voltage; 3 analog AI1; 4 analog AI2; 5 input pulse; 6 output torque; 7 host-controller command; 8 target frequency	0	√	0x0435
F460	AI1 input-characteristic selection	0 linear; 1 piecewise-linear	0	×	0x043C
F461	AI2 input-characteristic selection	0 linear; 1 piecewise-linear	0	×	0x043D
F462	AI1 inserted point A1 voltage (V)	F400～F464	2. 00	×	0x043E
F463	AI1 setting at inserted point A1	F401～F465	1. 20	×	0x043F
F464	AI1 inserted point A2 voltage (V)	F462～F466	5. 00	×	0x0440
F465	AI1 setting at inserted point A2	F463～F467	1. 50	×	0x0441
F466	AI1 inserted point A3 voltage (V)	F464～F402	8. 00	×	0x0442
F467	AI1 setting at inserted point A3	F465～F403	1. 80	×	0x0443
F468	AI2 inserted point B1 voltage (V)	F406～F470	2. 00	×	0x0444
F469	AI2 setting at inserted point B1	F407～F471	1. 20	×	0x0445
F470	AI2 inserted point B2 voltage (V)	F468～F472	5. 00	×	0x0446
F471	AI2 setting at inserted point B2	F469～F473	1. 50	×	0x0447
F472	AI2 inserted point B3 voltage (V)	F470～F408	8. 00	×	0x0448
F473	AI2 setting at inserted point B3	F471～F409	1. 80	×	0x0449

Multi-Step Speed

Code	Function	Setting Range	Default	Change	Address
F500	Multi-step speed type	0 three-step speed; 1 fifteen-step speed; 2 automatic cycling of up to eight steps	1	×	0x0500
F501	Number of automatic-cycle steps	2～8	7	√	0x0501
F502	Automatic-cycle count	0– 9999; 0 means unlimited cycling	0	√	0x0502
F503	State after the selected cycle count is completed	0 stop; 1 continue at the final step speed	0	√	0x0503
F504	Step 1 frequency (Hz)	F112～F111	5.00	√	0x0504
F505	Step 2 frequency (Hz)	F112～F111	10.00	√	0x0505
F506	Step 3 frequency (Hz)	F112～F111	15.00	√	0x0506
F507	Step 4 frequency (Hz)	F112～F111	20.00	√	0x0507
F508	Step 5 frequency (Hz)	F112～F111	25.00	√	0x0508
F509	Step 6 frequency (Hz)	F112～F111	30.00	√	0x0509
F510	Step 7 frequency (Hz)	F112～F111	35.00	√	0x050A
F511	Step 8 frequency (Hz)	F112～F111	40.00	√	0x050B
F512	Step 9 frequency (Hz)	F112～F111	5.00	√	0x050C
F513	Step 10 frequency (Hz)	F112～F111	10.00	√	0x050D
F514	Step 11 frequency (Hz)	F112～F111	15.00	√	0x050E
F515	Step 12 frequency (Hz)	F112～F111	20.00	√	0x050F
F516	Step 13 frequency (Hz)	F112～F111	25.00	√	0x0510
F517	Step 14 frequency (Hz)	F112～F111	30.00	√	0x0511
F518	Step 15 frequency (Hz)	F112～F111	35.00	√	0x0512

F519	Step 1 acceleration time (s)	0. 1～3000	Model-dependent	√	0x0513
F520	Step 2 acceleration time (s)	0. 1～3000		√	0x0514
F521	Step 3 acceleration time (s)	0. 1～3000		√	0x0515
F522	Step 4 acceleration time (s)	0. 1～3000		√	0x0516
F523	Step 5 acceleration time (s)	0. 1～3000		√	0x0517
F524	Step 6 acceleration time (s)	0. 1～3000		√	0x0518
F525	Step 7 acceleration time (s)	0. 1～3000		√	0x0519
F526	Step 8 acceleration time (s)	0. 1～3000		√	0x051A
F527	Step 9 acceleration time (s)	0. 1～3000		√	0x051B
F528	Step 10 acceleration time (s)	0. 1～3000		√	0x051C
F529	Step 11 acceleration time (s)	0. 1～3000		√	0x051D
F530	Step 12 acceleration time (s)	0. 1～3000		√	0x051E
F531	Step 13 acceleration time (s)	0. 1～3000		√	0x051F
F532	Step 14 acceleration time (s)	0. 1～3000		√	0x0520
F533	Step 15 acceleration time (s)	0. 1～3000		√	0x0521
F534	Step 1 deceleration time (s)	0. 1～3000		√	0x0522
F535	Step 2 deceleration time (s)	0. 1～3000		√	0x0523
F536	Step 3 deceleration time (s)	0. 1～3000		√	0x0524
F537	Step 4 deceleration time (s)	0. 1～3000		√	0x0525
F538	Step 5 deceleration time (s)	0. 1～3000		√	0x0526
F539	Step 6 deceleration time (s)	0. 1～3000		√	0x0527
F540	Step 7 deceleration time (s)	0. 1～3000		√	0x0528
F541	Step 8 deceleration time (s)	0. 1～3000		√	0x0529
F542	Step 9 deceleration time (s)	0. 1～3000		√	0x052A

F543	Step 10 deceleration time (s)	0. 1～3000	Model-dependent	√	0x052B
F544	Step 11 deceleration time (s)	0. 1～3000		√	0x052C
F545	Step 12 deceleration time (s)	0. 1～3000		√	0x052D
F546	Step 13 deceleration time (s)	0. 1～3000		√	0x052E
F547	Step 14 deceleration time (s)	0. 1～3000		√	0x052F
F548	Step 15 deceleration time (s)	0. 1～3000		√	0x0530
F549	Step 1 running direction	0 forward; 1 reverse	0	√	0x0531
F550	Step 2 running direction	0 forward; 1 reverse	0	√	0x0532
F551	Step 3 running direction	0 forward; 1 reverse	0	√	0x0533
F552	Step 4 running direction	0 forward; 1 reverse	0	√	0x0534
F553	Step 5 running direction	0 forward; 1 reverse	0	√	0x0535
F554	Step 6 running direction	0 forward; 1 reverse	0	√	0x0536
F555	Step 7 running direction	0 forward; 1 reverse	0	√	0x0537
F556	Step 8 running direction	0 forward; 1 reverse	0	√	0x0538
F557	Step 1 running time (s)	0. 1～3000	1. 0	√	0x0539
F558	Step 2 running time (s)	0. 1～3000	1. 0	√	0x053A
F559	Step 3 running time (s)	0. 1～3000	1. 0	√	0x053B
F560	Step 4 running time (s)	0. 1～3000	1. 0	√	0x053C
F561	Step 5 running time (s)	0. 1～3000	1. 0	√	0x053D
F562	Step 6 running time (s)	0. 1～3000	1. 0	√	0x053E
F563	Step 7 running time (s)	0. 1～3000	1. 0	√	0x053F
F564	Step 8 running time (s)	0. 1～3000	1. 0	√	0x0540
F565	Stop time after step 1 (s)	0. 0～3000	0. 0	√	0x0541
F566	Stop time after step 2 (s)	0. 0～3000	0. 0	√	0x0542
F567	Stop time after step 3 (s)	0. 0～3000	0. 0	√	0x0543

F568	Stop time after step 4 (s)	0. 0～3000	0. 0	√	0x0544
F569	Stop time after step 5 (s)	0. 0～3000	0. 0	√	0x0545
F570	Stop time after step 6 (s)	0. 0～3000	0. 0	√	0x0546
F571	Stop time after step 7 (s)	0. 0～3000	0. 0	√	0x0547
F572	Stop time after step 8 (s)	0. 0～3000	0. 0	√	0x0548
F573	Step 9 running direction	0 forward; 1 reverse	0	√	0x0549
F574	Step 10 running direction	0 forward; 1 reverse	0	√	0x054A
F575	Step 11 running direction	0 forward; 1 reverse	0	√	0x054B
F576	Step 12 running direction	0 forward; 1 reverse	0	√	0x054C
F577	Step 13 running direction	0 forward; 1 reverse	0	√	0x054D
F578	Step 14 running direction	0 forward; 1 reverse	0	√	0x054E
F579	Step 15 running direction	0 forward; 1 reverse	0	√	0x054F
F580	Multi-step mode selection	0 mode 1: 0000 invalid, 0001 selects step 1, and so on; 1 mode 2: 0000 selects step 1, 0001 selects step 2, and so on, while 1111 is invalid	0	√	0x0550

Auxiliary function

Code	Function	Setting Range	Default	Change	Address
F600	DC-braking function	0 disabled; 1 braking before start; 2 braking during stop; 3 braking both before start and during stop	0	×	0x0600
F601	DC-braking start frequency (Hz)	0.20～50.00	1.00	√	0x0601
F602	Pre-start DC-braking strength (%)	≤30 kW: 0– 250; ≥37 kW: 0– 200	50	×	0x0602
F603	Stopping DC-braking strength (%)	≤30 kW: 0– 250; ≥37 kW: 0– 200	100	×	0x0603
F604	Pre-start braking duration (s)	0.00～30.00	0.50	√	0x0604
F605	Stopping-brake duration (s)	0.00～30.00	0.50	√	0x0605
F607	Stall-control function selection	0– 2 reserved; 3 voltage and current control; 4 voltage control; 5 current control	3	√	0x0607
F608	Overcurrent-stall threshold (%)	60～200	160	√	0x0608
F609	Overvoltage-stall threshold (%)	110～200	Model-dependent	√	0x0609
F610	Stall-protection decision time (s)	0.1～3000.0	60.0	√	0x060A
F611	Dynamic-braking threshold (V)	200～1000	Model-dependent	△	0x060B
F612	Braking percentage (%)	0～100	80	×	0x060C
F613	Speed-search enable	0 disabled; 1 enabled; 2 enabled on first run only	0	×	0x060D

F614	Speed-search mode	0 search from stopped frequency; 1 search from maximum frequency; 2 search frommemorized stop frequency with direction detection enabled; 3 search from upper frequency with direction detection enabled	1	×	0x060E
F615	Speed-search rate (%)	1～100	20	×	0x060F
F618	Speed-search delay time (s)	0. 5～60. 0	1. 5	×	0x0614
F622	Dynamic-braking mode	0 fixed duty cycle; 1 automatic duty cycle	1	√	0x0620
F631	VDC regulation enable	0 disabled; 1 enabled; 2 reserved	0	√	0x061F
F632	VDC regulator target voltage (V)	200～800	Model-dependent	√ ○	0x0620
F638	Parameter-copy enable	0 copy disabled; 1 parameter download 1, voltage class and power rating must match; 2 parameter download 2, voltage class and power rating ignored	1	×	0x0626
F639	Parameter-copy code		Model-dependent	△	0x0627
F640	Parameter-copy type	0 copy all parameters; 1 copy parameters except motor parameters F801– F810/F844	1	×	0x0628
F641	Low-frequency oscillation-suppression gain	0– 100; 0 disables the function	Model-dependent	×	0x0629

F671	V/F-separated voltage-reference channel	0 F672; 1 AI1; 2 AI2; 3 AI3; 4 communication reference; 5 pulse reference; 6 PID reference	0	×	0x0647
F672	V/F-separated digital voltage reference (%)	0.00～100.00	100.00	√	0x0648
F673	V/F-separated voltage-reference lower limit (%)	0.00～F674	0.00	×	0x0649
F674	V/F-separated voltage-reference upper limit (%)	F673～100.00	100.00	×	0x064A
F675	V/F-separated voltage acceleration time (s)	0.0～3000.0	5.0	√	0x064B
F676	V/F-separated voltage deceleration time (s)	0.0～3000.0	5.0	√	0x064C
F677	V/F-separated stopping mode	0 voltage and frequency both decrease to zero using their respective deceleration times; 1 voltage decreases to zero first, then frequency; 2 frequency decreases to zero first, then voltage	0	×	0x064D
F678	V/F-separated voltage judgment	0 no judgment; 1 automatic judgment	0	×	0x064E
F679	V/F-separated judgment switching point (V)	200～600	430	×	0x064F
F680	V/F-separated switching-point bandwidth (%)	0.0～100.0	0.5	×	0x0650

TIMING AND PROTECTION

Code	Function	Setting Range	Default	Change	Address
F700	Terminal coast-to-stop mode	0 immediate coast to stop; 1 delayed coast to stop	0	√	0x0700
F701	Coast-to-stop and programmable-terminal action delay (s)	0.0～60.0	0.0	√	0x0701
F702	Fan-control selection	0 temperature-controlled; 1 runs whenever powered; 2 run-command controlled; 3 periodic operation	2	√	0x0702
F704	VFD overload pre-alarm coefficient (%)	50～100	80	×	0x0704
F705	Motor overload pre-alarm coefficient (%)	50～100	80	×	0x0705
F706	VFD overload coefficient (%)	100～150	120	×	0x0706
F707	Motor overload coefficient (%)	20～100	100	×	0x0707
F708	Most-recent fault type	2 OC overcurrent; 3 OE overvoltage; 4 PF1 input phase loss; 5 OL1 VFD overload; 6 LU input undervoltage; 7 OH VFD overheat; 8 OL2 motor overload; 11 ESP external emergency stop; 12 Err3 current fault before run; 13 Err2 no motor connected during parameter identification; 15 Err4 current-sampling fault; 16 OC1 overcurrent protection; 17 PF0 output phase loss; 18 reserved; 23 Err5 PID parameter-setting error; 45 CE communication timeout; 49 Err6 watchdog fault		△	0x0708
F709	Second-most-recent fault type			△	0x0709
F710	Third-most-recent fault type			△	0x070A
F711	Frequency at most-recent fault (Hz)			△	0x070B

F712	Current at most-recent fault (A)			△	0x070C
F713	DC-bus voltage at most-recent fault (V)			△	0x070D
F714	Frequency at second-most-recent fault (Hz)			△	0x070E
F715	Current at second-most-recent fault (A)			△	0x070F
F716	DC-bus voltage at second-most-recent fault (V)			△	0x0710
F717	Frequency at third-most-recent fault (Hz)			△	0x0711
F718	Current at third-most-recent fault (A)			△	0x0712
F719	DC-bus voltage at third-most-recent fault (V)			△	0x0713
F720	Overcurrent-fault count			△	0x0714
F721	Overvoltage-fault count			△	0x0715
F722	Overtemperature-fault count			△	0x0716
F723	Overload-fault count			△	0x0717
F724	Input phase-loss protection	0 disabled; 1 enabled	1	×	0x0718
F725	Undervoltage protection reset	1 manual reset; 2 automatic reset	2	×	0x0719
F726	Overtemperature protection	0 disabled; 1 enabled	1	○×	0x071A
F727	Output phase-loss protection	0 disabled; 1 enabled	Model-dependent	○	0x071B
F728	Input phase-loss filter constant	0.1～60.0	0.5	√	0x071C
F729	Reserved				0x071D
F730	Overtemperature-protection filter constant	0.1～60.0	5.0	√	0x071E
F732	Undervoltage-protection voltage threshold (V)	100～450	Model-dependent	○	0x0720

F737	OC1 enable	0 disabled; 1 enabled	1	○×	0x0725
F738	OC1 protection coefficient	0.50～3.00	2.50	×	0x0726
F739	OC1 protection-event count			△	0x0727
F741	Analog-input loss protection	0 no action; 1 fault stop and display AErr; 2 stop without displaying AErr; 3 run at lower frequency; 4 reserved	0	√	0x0729
F742	Signal-loss decision threshold (%)	1～100	50	√	0x072A
F745	Overheat pre-alarm threshold (%)	0～100	80	○*	0x072D
F747	Automatic carrier-frequency adjustment enable	0 disabled; 1 enabled	1	√	0x072F
F753	Overload-protection motor type	0 standard motor; 1 inverter-duty motor	1	×	0x0735
F754	Zero-current detection threshold (%)	0～200	5	×	0x0736
F755	Zero-current duration (s)	0.0～60.0	0.5	√	0x0737
F760	Ground-fault protection	0 disabled; 1 active at power-up; 2 active during running; 3 active both at power-up and during running	3	×	0x073C
F776	Ground-fault startup delay (s)	0.0～3600.0	2.0	√	0x074C

MOTOR PARAMETERS

Code	Function	Setting Range	Default	Change	Address
F800	Motor parameter identification	0 no identification; 1 rotating identification; 2 static identification	0	×	0x0800
F801	Rated power (kW)	0.1～1000	Model-dependent	×	0x0801
F802	Rated voltage (V)	1～1300		×	0x0802
F803	Rated current (A)	0.2～6553.5		×	0x0803
F804	Motor pole count	2～100	4	×	0x0804
F805	Rated speed (rpm)	1～39000		×	0x0805
F806	Stator resistance	Drive ≤15 kW: 0.001– 65.53 Ω; drive >15 kW: 0.1– 6553 mΩ	Model-dependent	×	0x0806
F807	Rotor resistance	Drive ≤15 kW: 0.001– 65.53 Ω; drive >15 kW: 0.1– 6553 mΩ	Model-dependent	×	0x0807
F808	Leakage reactance/ inductance (mH)	Drive ≤15 kW: 0.01– 655.3 mH; drive >15 kW: 0.001– 65.53 mH	Model-dependent	×	0x0808
F809	Mutual reactance/ inductance (mH)	Drive ≤15 kW: 0.01– 6553.0 mH; drive >15 kW: 0.001– 655.3 mH	Model-dependent	×	0x0809
F810	Motor rated frequency (Hz)	0.5～590.0	50.00	○×	0x080A
F812	Pre-excitation time (s)	0.00～30.00	0.30	√	0x080C
F813	Speed-loop KP1		Model-dependent	√	0x080D
F814	Speed-loop KI1			√	0x080E
F815	Speed-loop KP2			√	0x080F
F816	Speed-loop KI2			√	0x0810

F817	PI switching frequency 1 (Hz)	0～F818		√	0x0811
F818	PI switching frequency 2 (Hz)	F817～F111		√	0x0812
F844	Motor no-load current (A)	0. 1～F803	Model-dependent	○ ×	0x082C
F866	Static position-identification enable	0 disabled; 1 enabled; 2 enabled on first run	2	×	0x0842
F867	Position-identification current	0～120	80	×	0x0843
F868	Position-identification frequency	1000～16000	16000	×	0x0844
F870	PMSM back EMF (mV/rpm)	0.1– 999.9, line-to-line RMS	Model-dependent	×	0x0846
F871	PMSM d-axis inductance (mH)	0. 01～655. 35		×	0x0847
F872	PMSM q-axis inductance (mH)	0. 01～655. 35		×	0x0848
F873	PMSM stator resistance (Ω)	0.001– 65.535, phase resistance		×	0x0849
F875	Position-identification angle compensation	0～1000	0	×	0x084B
F876	No-load injection current (%)	0. 0～100. 0	30. 0	×	0x084C
F878	No-load injection-current compensation cutoff point (%)	0. 0～50. 0	10. 0	×	0x084E
F879	Heavy-load injection current (%)	0. 0～100. 0	0. 0	×	0x084F
F880	PCE detection time (s)	0. 1～10. 0	0. 2	×	0x0850

communication parameters

Code	Function	Setting Range	Default	Change	Address
F900	Communication address	1– 255 individual drive address; 0 broadcast address	1	√	0x0900
F901	Communication mode	1：ASCII 2：RTU	2	√	0x0901
F902	Number of stop bits	1～2	2		0x0902
F903	Parity selection	0 no parity; 1 odd parity; 2 even parity	0	√	0x0903
F904	Communication baud rate (bps)	0：1200 1：2400 2：4800 3：9600 4：19200 5：38400 6：57600	3	√	0x0904
F905	Communication timeout (s)	0.0～3000.0	0.0	√	0x0905

PID parameters

Code	Function	Setting Range	Default	Change	Address
FA00	Water-supply operating mode	0 single-drive/general PID mode; 1 fixed mode; 2 timed alternation mode	0	×	0x0A00
FA01	PID setpoint source	0 FA04; 1 AI1; 2 AI2; 3 AI3; 4 FI pulse-frequency input	0	×	0x0A01
FA02	PID feedback source	1 AI1; 2 AI2; 3 FI pulse-frequency input; 4 communication reference; 8 AI1−AI2; 9 AI1+AI2; 10 Max(AI1,AI2); 11 Min(AI1,AI2)	1	×	0x0A02
FA03	PID upper limit (%)	FA04～100.0	100.0	√	0x0A03
FA04	Digital PID setpoint (%)	FA05～FA03	50.0	√	0x0A04
FA05	PID lower limit (%)	0.0～FA04	0.0	√	0x0A05
FA06	PID action polarity	0 direct action; 1 reverse action	1	×	0x0A06
FA07	Sleep enable	0 enabled; 1 disabled	1	×	0x0A07
FA09	PID lower output-frequency limit (Hz)	F112～F111	5.00	√	0x0A09
FA10	Sleep waiting time (s)	0.0～500.0	15.0	√	0x0A0A
FA11	Wake-up time (s)	0.0～3000	3.0	√	0x0A0B
FA12	PID upper output-frequency limit (Hz)	FA09～F111	50.00	√	0x0A0C
FA18	Enable PID setpoint modification	0 disabled; 1 enabled	1	×	0x0A12
FA19	Proportional gain P	0.00～10.00	0.30	√	0x0A13
FA20	Integral time I (s)	0.1～100.0	0.3	√	0x0A14
FA21	Derivative time D (s)	0.0～10.0	0.0	√	0x0A15
FA22	PID sampling period (s)	0.1～10.0	0.1	√	0x0A16

FA23	PID negative-frequency output selection	0 disabled; 1 enabled; 2 output negative frequency only	0	√	0x0A17
FA24	Timed-alternation unit	0 hours; 1 minutes	0	×	0x0A18
FA25	Timed-alternation interval	1～9999	100	×	0x0A19
FA26	Underload-protection mode	0 no protection; 1 contact-signal protection; 2 PID-based protection; 3 current-based protection	0	×	0x0A1A
FA27	Underload-protection current threshold (%)	10～150	80	√	0x0A1B
FA28	Underload-protection wake-up time (min)	1～3000	60	√	0x0A1C
FA29	PID deadband (%)	0. 0～10. 0	2. 0	√	0x0A1D
FA30	VFD-pump restart delay (s)	2. 0～999. 9	20. 0	√	0x0A1E
FA31	Delay before adding a mains-frequency pump (s)	0. 1～999. 9	30. 0	√	0x0A1F
FA32	Delay before removing a mains-frequency pump (s)	0. 1～999. 9	30. 0	√	0x0A20
FA33	Constant-pressure water-supply stop mode	0 coast to stop; 1 decelerate to stop	0	×	0x0A21
FA36	Enable relay 1	0 not used; 1 used	0	×	0x0A24
FA37	Enable relay 2	0 not used; 1 used	0	×	0x0A25
FA47	Relay 1 engagement sequence	1～20	20	×	0x0A2F
FA48	Relay 2 engagement sequence	1～20	20	×	0x0A30
FA58	Firefighting pressure setpoint (%)	0. 0～100. 0	80. 0	√	0x0A3A
FA59	Emergency firefighting mode	0 disabled; 1 emergency firefighting mode 1; 2 emergency firefighting mode 2	0	×	0x0A3B
FA60	Emergency firefighting operating frequency (Hz)	F112～F111	50. 00	√	0x0A3C
FA62	Action after fire-alarm signal clears	0～1	0	×	0x0A3E
FA66	Underload-protection duration (s)	0. 0～60. 0	≤30 kW: 20.0; ≥37 kW: 1.0	√	0x0A42

Torque-control parameters

Code	Function	Setting Range	Default	Change	Address
FC00	Speed/torque-control selection	0 speed control; 1 torque control; 2 terminal switching	0	√	0x0C00
FC02	Torque acceleration/ deceleration time (s)	0.1～100.0	1.0	√	0x0C02
FC06	Torque-reference channel	0 digital reference FC09; 1 AI1; 2 AI2; 3 AI3; 4 FI pulse input	0	×	0x0C06
FC07	Torque-reference coefficient	0～3.000	3．000	×	0x0C07
FC09	Torque command value (%)	0～300.0	100.0	√	0x0C09
FC14	Offset-torque reference channel	0 digital reference FC17; 1 AI1; 2 AI2; 3 AI3; 4 FI pulse input	0	×	0x0C0E
FC15	Offset-torque coefficient	0～0.500	0.500	×	0x0C0F
FC16	Offset-torque cutoff frequency (%)	0～100.0	10.00	×	0x0C10
FC17	Offset-torque command value (%)	0～50.00	10.00	√	0x0C11
FC22	Forward-speed limit channel	0 digital reference FC23; 1 AI1; 2 AI2; 3 AI3; 4 FI pulse input	0	×	0x0C16
FC23	Forward-speed limit (%)	0.0～100.0	10.0	√	0x0C17
FC24	Reverse-speed limit channel	0 digital reference FC25; 1 AI1; 2 AI2; 3 AI3; 4 FI pulse input	0	×	0x0C18

FC25	Reverse-speed limit (%)	0.0～100.0	10.0	√	0x0C19
FC28	Motoring-torque limit channel	0 digital reference FC30; 1 AI1; 2 AI2; 3 AI3; 4 FI pulse input	0	×	0x0C1C
FC29	Motoring-torque limit coefficient	0.0～3.000	3.000	×	0x0C1D
FC30	Motoring-torque limit (%)	0.0～300.0	200.0	√	0x0C1E
FC33	Regenerative-torque limit channel	0 digital reference FC35; 1 AI1; 2 AI2; 3 AI3; 4 FI pulse input	0	×	0x0C21
FC34	Regenerative-torque limit coefficient	0.000～3.000	3.000	×	0x0C22
FC35	Regenerative-torque limit (%)	0.0～300.0	200.0	√	0x0C23

Display Parameters

Code	Function	Setting Range	Default	Change	Address
H000	Running frequency / target frequency (Hz)			△	0x4300
H001	Load speed / target speed (rpm)			△	0x4301
H002	Output current (A)			△	0x4302
H003	Output voltage (V)			△	0x4303
H004	DC-bus voltage (V)			△	0x4304
H005	PID feedback (%)			△	0x4305
H006	Temperature (°C)			△	0x4306
H007	Count value			△	0x4307
H008	Linear speed			△	0x4308
H009	PID setpoint (%)			△	0x4309
H012	Output power (kW)			△	0x430C
H013	Output torque (%)			△	0x430D
H014	Target torque (%)			△	0x430E
H017	Current multi-step speed number			△	0x4311
H018	Input pulse frequency (0.01 kHz)			△	0x4312
H019	Feedback speed (Hz)			△	0x4313
H020	Feedback speed (rpm)			△	0x4314
H021	AI1 voltage, digital representation			△	0x4315
H022	AI2 voltage, digital representation			△	0x4316
H023	AI3 voltage, digital representation			△	0x4317
H025	Cumulative powered-on time (minutes)			△	0x4319
H026	Cumulative running time (minutes)			△	0x431A
H027	Input pulse frequency (Hz)			△	0x431B
H028	Communication reference value			△	0x431C
H029	Cumulative running time (seconds)			△	0x431D
H030	Main frequency X display (Hz)			△	0x431E
H031	Auxiliary frequency Y display (Hz)			△	0x431F
H036	Cumulative powered-on time (hours)			△	0x4324
H037	Cumulative running time (hours)			△	0x4325

All parameters on this page are read-only monitors (△).

× The function code can be changed only while the drive is stopped.

√ The function code can be changed while the drive is stopped or running.

△ The function code is read-only and can only be viewed, whether stopped or running.

◯ The function code is not initialized when factory defaults are restored; it can only be changed manually.

* The parameter can be modified by the manufacturer.

APPENDIX 7 INPUT FILTER MODELS AND DIMENSIONS

1 Input Filter Selection

VFD Model	Matching Filter Model	Remarks
A700-4T0007-E1F271B-XX	FN3258-7-44	Three-phase 380 V, plastic enclosure, wall-mounted
A700-4T0015-E1F271B-XX	FN3258-7-44	
A700-4T0022-E2F273B-XX	FN3258-16-44	
A700-4T0030-E2F273B-XX	FN3258-16-44	
A700-4T0040-E2F273B-XX	FN3258-16-44	
A700-4T0055-E2F273B-XX	FN3258-16-44	
A700-4T0075-E4F273B-XX	FN3258-42-33	
A700-4T0110-E4F273B-XX	FN3258-42-33	
A700-4T0150-E5F273B-XX	FN3258-42-33	
A700-4T0185-E5F273B-XX	FN3258-55-34	
A700-4T0220-E6F273B-XX	FN3258-55-34	
A700-4T0300-E6F273B-XX	FN3258-75-34	
A700-4T0370-E7F275N-XX	FN3258-100-35	
A700-4T0450-E7F275N-XX	FN3258-100-35	
A700-4T0550-C4F275N-XX	FN3359-180-28	Three-phase 380 V, metal enclosure, wall-mounted
A700-4T0750-C5F275N-XX	FN3359-180-28	

2 Filter Outline Dimensions

2.1 FN2060 outline and mounting dimensions are shown in the source drawing on this page and continued on the next page.

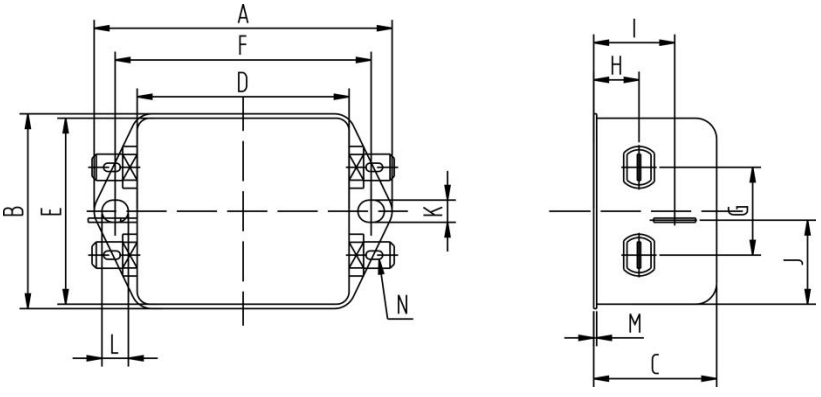

All dimensions are in millimetres unless otherwise stated. Use the source drawing with this table.

Dimension	FN2060-6-06	FN2060-10-06	FN2060-20-06
A	71	85	113.5±1
B	46.6	54	57.5±1
C	29.3	30.3	45.4±1
D	50.5	64.8	94±1
E	44.5	49.8	56
F	61	75	103
G	21	27	25
H	10.8	12.3	12.4
I	19.3	20.8	32.4
J	20.1	19.9	15.5
K	5.3	5.3	4.4
L	6.3	6.3	6
M	0.7	0.7	0.9
N	6.3×0.8		

2.2 FN3258 outline and mounting dimensions

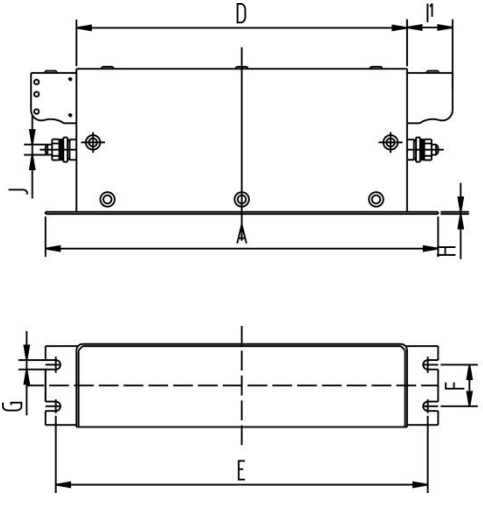

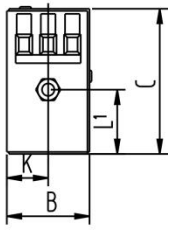

Dimension	FN3258-7 -44	FN3258-16 -44	FN3258-42 -33	FN3258-55 -34	FN3258-75 -34	FN3258-100 -35
A	190	250	310	250	270	270
B	40	45	50	85	80	90
C	70	70	85	90	135	150
D	160	220	280	220	240	240
E	180	235	295	235	255	255
F	20	25	30	60	60	65
G	4.5	5.4	5.4	5.4	6.5	6.5
H	1	1	1	1	1.5	1.5

I1	22	22	25	39	39	45
J	M5	M5	M6	M6	M6	M10
K	20	22.5	25	42.5	40	45
L1	29.5	29.5	37.5	26.5	70.5	64

2.3 FN3359 outline and mounting dimensions

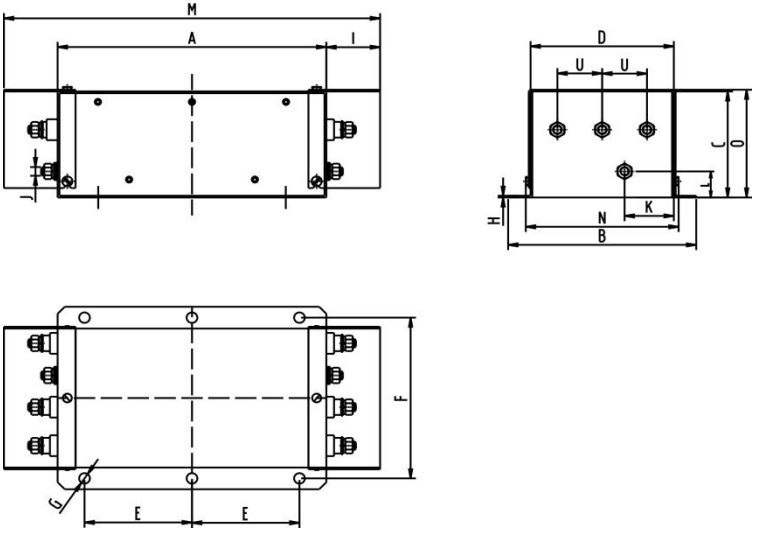

Dimension	FN3359-180-28	FN3359-250-28
A	300	300
B	210	230
C	120	125
D	160	180
E	120	120
F	185	205
G	ϕ12	ϕ12
H	2	2
I	33	33
J	M10	M10

K	55	62.5
L	30	35
M	420	420
N	171	191
O	127	132
U	50	55

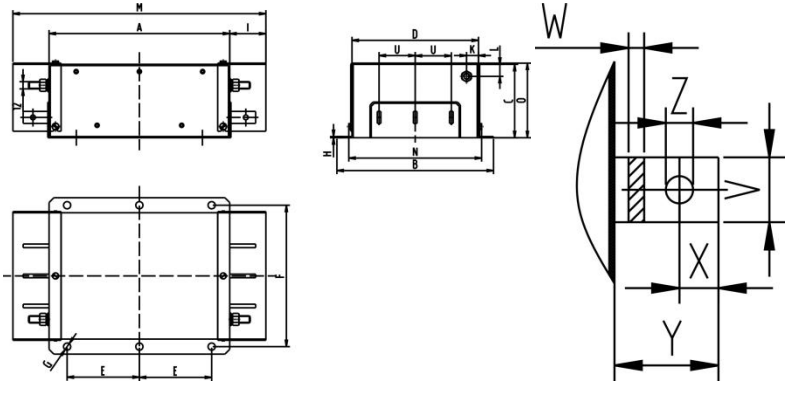

Dimension	FN3359-320-28	FN3359-400-99
A	300	300
B	260	260
C	115	115
D	210	210
E	120	120
F	235	235
G	ϕ12	ϕ12
H	2	2
I	43	43

J	M12	M12
K	20	20
L	20	20
M	440	440
N	221	221
O	122	122
U	60	60
V	25	25
W	6	6
X	15	15
Y	40	40
Z	φ10.5	φ10.5

Note: A complete EMC solution is available for the product to meet CE certification requirements.

For any model required to comply with CE certification, select and install the matching input filter specified in this manual. Otherwise, the installation will not meet the CE requirements.